#7

RESOLUTION NO. 16-05

A RESOLUTION OF THE CITY COMMISSION OF THE CITY OF HOLMES BEACH, FLORIDA, ADOPTING A STANDARD DETAILS MANUAL FOR PUBLIC WORKS WHICH MANUAL ESTABLISHES STANDARD DETAILS FOR ALL WORKS WITHIN THE CITY'S PUBLIC RIGHTS OF WAY AND FOR COLLECTION, RETENTION AND TREATMENT OF STORMWATER RUNOFF ON PRIVATE PROPERTIES; PROVIDING FOR CONFLICTS; PROVIDING FOR SEVERABILITY AND PROVIDING AN EFFECTIVE DATE.

WHEREAS, the City of Holmes Beach is responsible for the maintenance and expansion of the existing stormwater system which has been developed over a number of years for the purpose of collecting and disposing of stormwater; and

WHEREAS, pursuant to the Federal Clean Water Act, 33 U.S.C. 1251 et seq. The United States Environmental Protection Agency has published rules for stormwater discharge permits; and

WHEREAS, the City of Holmes Beach has been issued a stormwater discharge permit, as co-permittee, with Manatee County (FLS 000036) by the United States Environmental Protection Agency that requires the City to control pollution caused by stormwater runoff; and

WHEREAS, as a coastal community, bounded on the west by the Gulf of Mexico, the east bay waters of Sarasota Bay, in an identified evacuation zone, we recognize that the current stormwater system is antiquated and inadequate to control and manage a stormwater runoff within the incorporated limits; and

WHEREAS, all real property within the City receives a specific and direct benefit from the City adopting a Public Works Standard Details Manual; and

WHEREAS, the City desires to provide necessary and essential improvements and extensions to the existing infrastructure within the incorporated City limits to protect the health, safety and welfare of the citizens of the City of Holmes Beach and water quality in the surrounding waters of Sarasota Bay and Anna Maria Sound; and

WHEREAS, Policy 2.1.7 of the Holmes Beach Comprehensive Plan states that through site plan review, provisions contained in the City's Land Development Code or the permitting process of the appropriate regulatory agency, new development shall be required to adhere to the provisions of the City's stormwater drainage program.

WHEREAS, Policy 2.1.8 of the Holmes Beach Comprehensive Plan states that the rehabilitation of existing structures shall be required to adhere to the provisions contained in this element unless the rehabilitation will not: 1) result in an increase in the amount of impervious surface; 2) increase the amount of runoff generated by the site; 3) adversely impact existing natural drainage features; or 4) is not in conflict with other floodplain management provisions of the Land Development Code. If any of these conditions are not met, the project will be required to retrofit the stormwater drainage system to the extent necessary to off-set the additional impacts as determined by the Superintendent of Public Works.

WHEREAS, Policy 2.1.12 of the Holmes Beach Comprehensive Plan states that in recognition of the difficulties of maintaining an effective and efficient drainage system on a barrier island, the City shall aggressively enforce the drainage provisions found in the Land Development Code.

WHEREAS, the City Commission of the City of Holmes Beach has held workshops and hearings on this matter and finds the creation of a Public Works Standard Details Manual is in the best interest of the citizens, residents and others with interests within the City of Holmes Beach.

NOW, THEREFORE, BE IT RESOLVED BY THE CITY COMMISSION OF THE CITY OF HOLMES BEACH, FLORIDA:

Section 1. Pursuant to the authority in Chapter 166, Florida Statutes, the City's Comprehensive Plan, and the Land Development Code, the City Commission adopts the Public Works Standard Details Manual dated November 15, 2016 attached as Exhibit A and incorporated by reference herein for development within the City of Holmes Beach.

Section 2. The requirements of this resolution are intended to be consistent with the Comprehensive Plan and in compliance with other ordinances adopted by the City. Any conflicts between this resolution and the Comprehensive Plan or other City ordinance shall be resolved by applying the most stringent ordinance.

Section 3. Severability. If any section, subsection, paragraph, sentence, clause or phrase in this resolution is held invalid by a court of competent jurisdiction, then such invalidity shall not affect the remaining portions thereof.

(Signatures on following page)

PASSED AND ADOPTED by the City Commission of the City of Holmes Beach, Florida at regular meeting assembled this _____ day of _____, 2016.

_____
Marvin Grossman

_____
Pat Morton

_____
Jean Peelen

_____
Judy Titsworth

_____
Carol Soustek

Approved by me this ____ day of _____, 2016.

_____
Mayor Bob Johnson

Attest: _____
Stacey Johnston, MMC, City Clerk

EXHIBIT A

CITY OF HOLMES BEACH

PUBLIC WORKS STANDARD DETAILS MANUAL

NOVEMBER 15, 2016

SUBSTANTIAL EFFORT HAS BEEN MADE TO ENSURE THE INFORMATION CONTAINED IN THESE STANDARDS IS ACCURATE. HOWEVER, THE CITY OF HOLMES BEACH CANNOT ACCEPT RESPONSIBILITY FOR ANY ERRORS OR OVERSIGHTS IN THE USE OF THE MATERIAL OR IN THE PREPARATION OF THE ENGINEERING PLANS. THIS PUBLICATION IS INTENDED FOR USE BY PROFESSIONAL PERSONNEL COMPETENT TO EVALUATE THE SIGNIFICANCE AND LIMITATIONS OF ITS CONTENTS AND BE ABLE TO ACCEPT RESPONSIBILITY FOR THE APPLICATION OF THE MATERIAL IT CONTAINS.

THE DESIGNER MUST RECOGNIZE THAT NO HANDBOOK OR CODE CAN SUBSTITUTE FOR EXPERIENCED ENGINEERING JUDGEMENT. SOME OF THE RECOMMENDATIONS ARE UNDER FURTHER REVIEW AND MAY BE UPDATED LATER. USERS OF THESE STANDARDS ARE ENCOURAGED TO OFFER COMMENTS TO CITY OF HOLMES BEACH PUBLIC WORKS DEPT ON THE CONTENTS OF THIS PUBLICATION AND SUGGESTIONS FOR CHANGES IN FUTURE EDITIONS.

THESE STANDARDS ARE UNDER CONSTANT REVIEW AND ARE SUBJECT TO CHANGES APPROVED BY THE SUPERINTENDENT OF PUBLIC WORKS AND CITY ENGINEER. THE SUPERINTENDENT OF PUBLIC WORKS SHALL INTERPRET THESE STANDARDS, AS NEEDED, FOR APPLICATION AND RESOLUTION OF CONFLICTS.

NOTE: ALL CONSTRUCTION AND STANDARDS REFERENCED WITHIN SHALL MEET OR EXCEED F.D.O.T. ROADWAY AND TRAFFIC DESIGN STANDARDS (LATEST REVISION) AND F.D.O.T. STANDARD SPECIFICATIONS FOR ROAD AND BRIDGE CONSTRUCTION (LATEST REVISION), UNLESS OTHERWISE NOTED.

GENERAL INDEX

SECTION		SHEET NO. SERIES
100	DRIVEWAYS	100.0
200	CURB & GUTTER, DRAINAGE STRUCTURES, PIPE	200.0
300	SIDEWALKS	300.0
400	ROADS	400.0
500	TRAFFIC SUPPLEMENTAL SPECIFICATIONS	500.0
600	RESERVED	600.0
700	LOT DRAINAGE SPECIFICATIONS	700.0
800	RESERVED	800.0

DRIVEWAYS INDEX

	SHEET NO.
100 DRIVEWAYS	100.0
	100.1
A. RESIDENTIAL DRIVEWAY – SWALE	101.0
B. RESIDENTIAL DRIVEWAY – CURB	101.1
C. CURB CUT & TRANSITION W/T–FLARE FOR RESIDENTIAL DRIVEWAY	101.2
D. COMMERCIAL & INDUSTRIAL DRIVEWAY	101.3
E. TYPICAL DRIVEWAY, PIPE CROSS SECTION	102.0
F. MITERED END SECT. FOR ELIPTICAL, SINGLE AND MULTIPLE PIPES	102.1
G. MITERED END SECT. FOR ROUND, SINGLE AND MULTIPLE PIPES	102.2
H. DRIVEWAY PIPE/MITERED END SECTION	103.0
I. FILTER FABRIC JACKET	104.0
J. PERVIOUS/PERMEABLE DRIVEWAY OPTIONS WITHIN CITY RIGHTS OF WAY	105.0

CITY OF HOLMES BEACH
PUBLIC WORKS DEPARTMENT

REV.BY	DATE

DATE OF APPROVAL

DRIVEWAY INDEX

100.0

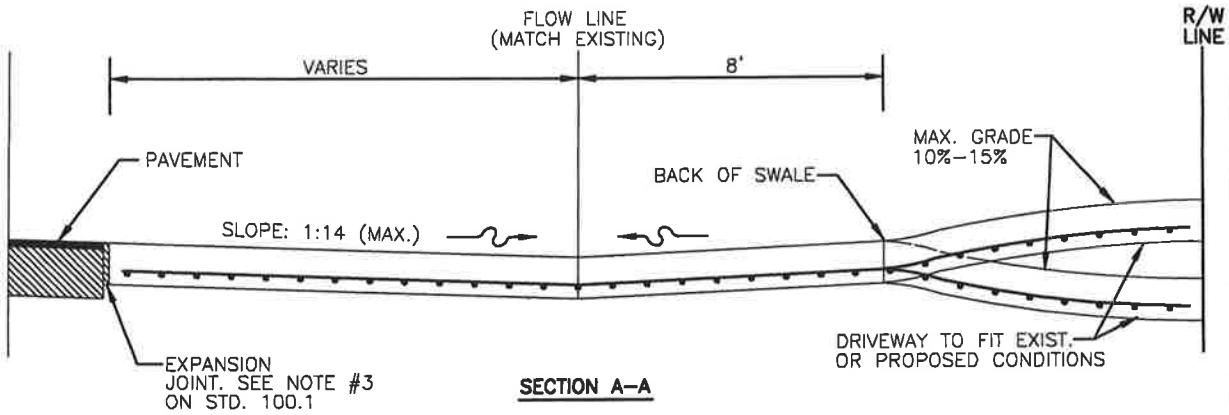

SECTION A–A

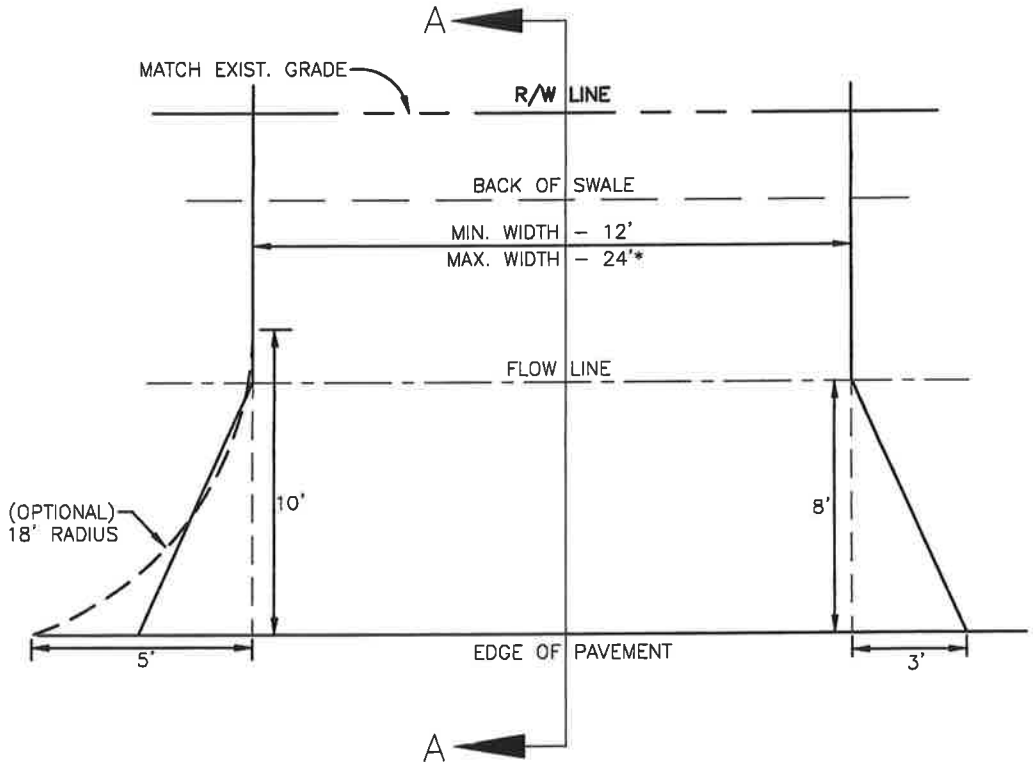

PLAN VIEW

* For driveways that can demonstrate the need for additional width, the width may not be greater than the LESSER of:

a.) 30' total at the R/W line

b.) 30% of the front footage as defined on the survey (or field measurements, 36' max.)

(A) CONSTRUCT WITH 6" REINFORCED CONCRETE (3,000 psi @ 28 DAYS) WITH 6"x6" #10 MESH OR FIBERMESH FROM EDGE OF PAVEMENT TO THE RIGHT–OF–WAY LINE.

(B) DRIVEWAYS ADJACENT TO A PAVED ROADWAY MUST HAVE THE APRON CONSTRUCTED IN COMPLIANCE WITH THE NOTE (A) ABOVE.

(C) EXISTING DRAINAGE FLOWLINE TO BE MAINTAINED. PIPING MAY BE REQUIRED AT THE COUNTY'S DISCRETION.

(D) 3'x8' FLARED APRON IS MINIMAL, OR 18' RADIUS.

(E) CITY ENGINEER OR SUPERINTENDENT OF PUBLIC WORKS MAY APPROVE THE USE OF A SWALE DRIVE, IF ON–SITE CONDITIONS ARE FAVORABLE.

CITY OF HOLMES BEACH PUBLIC WORKS DEPARTMENT			RESIDENTIAL (SWALE DRIVE)	101.0
REV.BY	DATE			
		DATE OF APPROVAL		

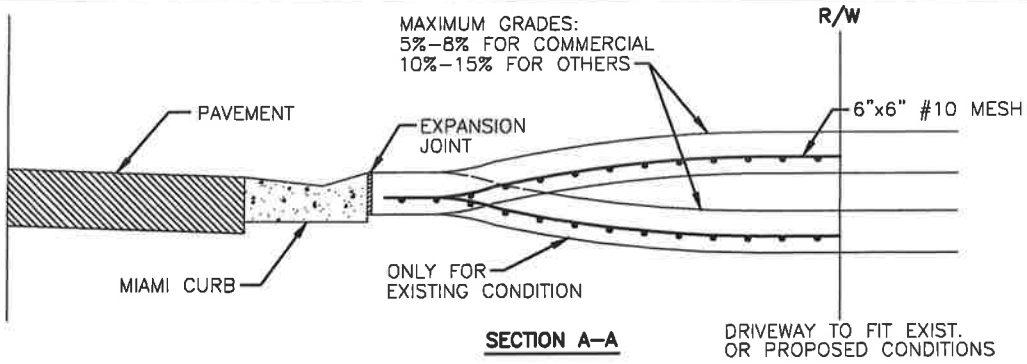

SECTION A–A

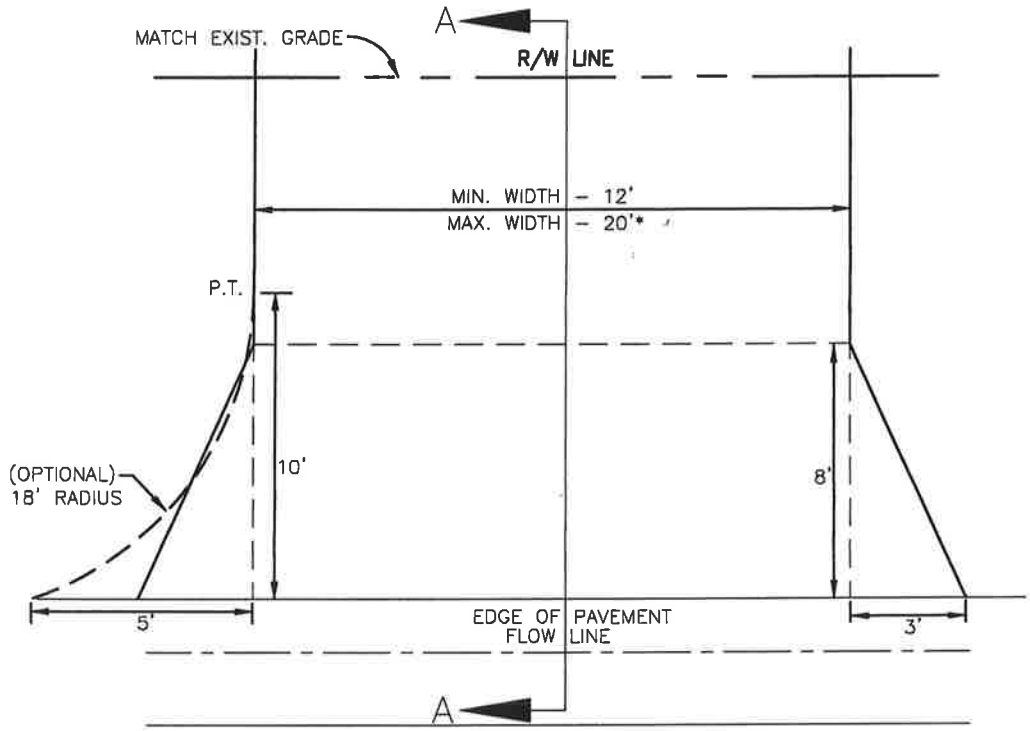

PLAN VIEW

* For driveways that can demonstrate the need for additional width, the width may not be greater than the LESSER of:

a.) 30' total at the R/W line

b.) 30% of the front footage as defined on the survey (or field measurement, 36' max.)

* OR AS OTHERWISE DETERMINED BY LDC. SECTION 8.15.B.3.b

(A) CONSTRUCT WITH 6" REINFORCED CONCRETE 3000 PSI @ 28 DAYS, 6"x6" #10 WIRE MESH FROM BACK OF CURB– TO R/W LINE.

(B) DRIVEWAYS ADJACENT TO A PAVED ROADWAY MUST HAVE THE APRON CONSTRUCTED IN COMPLIANCE WITH THE NOTE (A) ON PREVIOUS PAGE (STD. 101.0)

(C) MAINTAIN EXISTING DRAINAGE FLOWLINE. FOR PIPING SPECIFICATIONS REFER TO F.D.O.T. STANDARD SPECIFICATIONS SECTION 430. SEE NOTE 4, PAGE 100.1. SEE SECTION 200– DRAINAGE (STD. 200.0, 202.5).

(D) 3'x8' FLARE OR 18' RADIUS WITH CURB TRANSITION (TRANSITION FROM TYPE "F" CURB TO MIAMI CURB) SEE STD. 102.2 NO CHANGE WITH 3' VALLEY CROSSINGS – SEE STDS. 201.0, 201.1, 201.2, 201.4, 201.5, 201.6.

(E) EXPANSION JOINT 0.50" PREFORMED JOINT FILLER OR APPROVED ALTERNATE, DRIVES WIDER THAN 12' (BEYOND FLARE) PLACE JOINT ON 10' CENTER.

(F) LATERAL ALIGNMENT 45 DEGREES FOR DOUBLE DRIVE PER LOT, 90 DEGREES FOR SINGLE DRIVE, OFF CENTER LINE.

CITY OF HOLMES BEACH PUBLIC WORKS DEPARTMENT			**RESIDENTIAL (CURB DRIVE)**	**101.1**
REV.BY	DATE			
		DATE OF APPROVAL		

TYPE "F" CURB For * driveways that can demonstrate the need for additional width, the width may not be greater than the LESSER of:

a.) 30' total at the R/W line
b.) 30% of the front footage as defined on the survey (or field measurements)

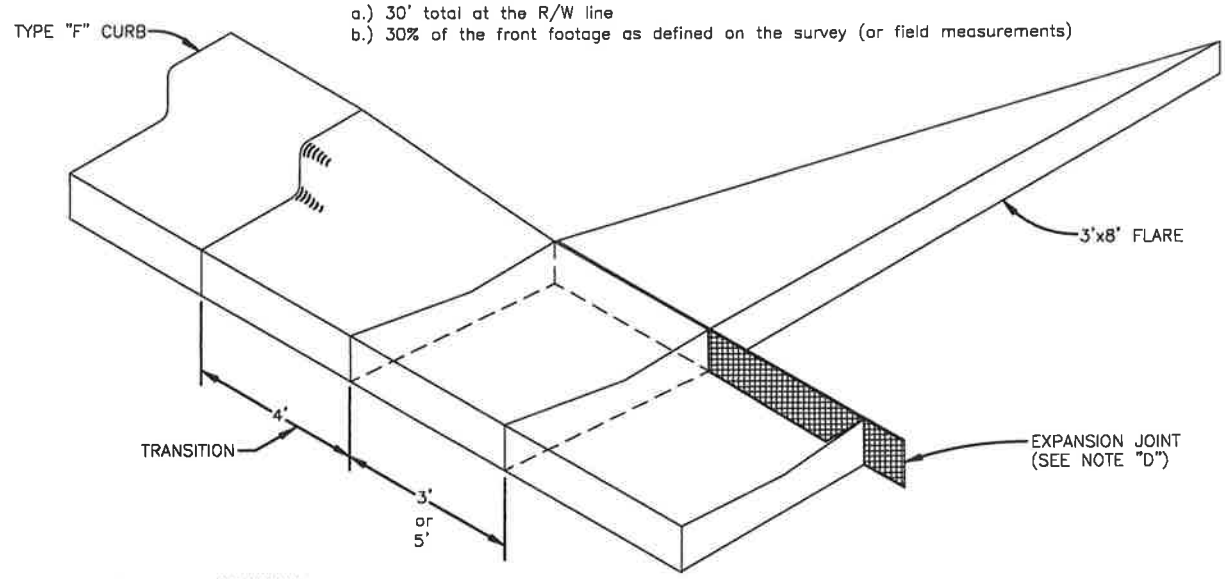

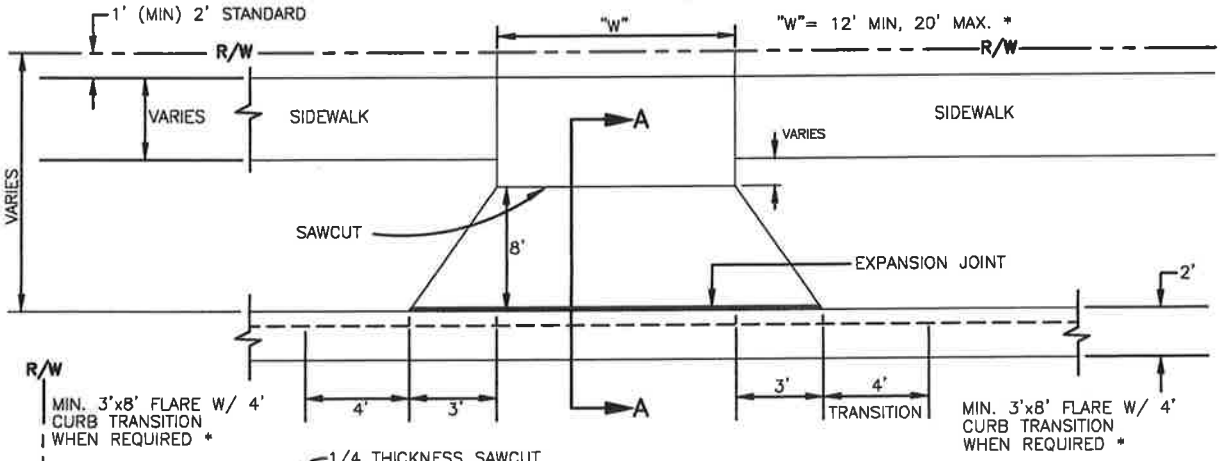

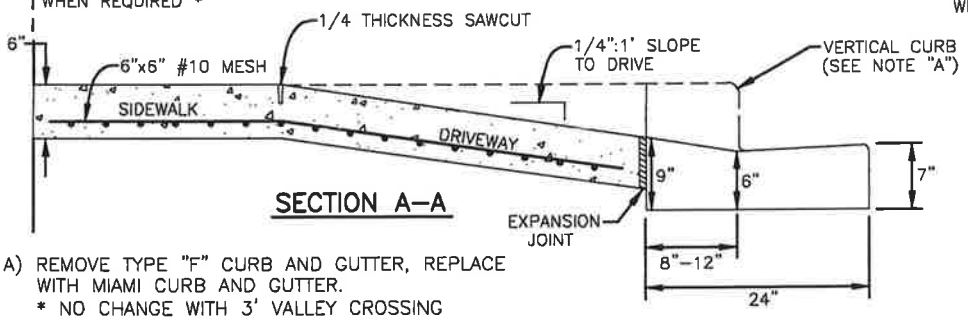

A) REMOVE TYPE "F" CURB AND GUTTER, REPLACE WITH MIAMI CURB AND GUTTER.
* NO CHANGE WITH 3' VALLEY CROSSING

B) REMOVE EXISTING SIDEWALK, REPLACE WITH 6" CONCRETE, 6"x6" #10 MESH 3000 PSI AT 28 DAYS.

* OR AS DETERMINED BY LDC. SECTION 8.15B3b

C) DRIVEWAY CONSTRUCTED WITH 6" CONCRETE WITH 6"x6" #10 MESH OR FIBERMESH, 3000 PSI AT 28 DAYS

D) EXPANSION JOINT 1/2" PREFORMED JOINT FILLER PER FDOT SECTION 932–1.1 OR APPROVED ALTERNATE

E) 5' SIDEWALK ON LOCAL STREETS, 5' SIDEWALK ON THOROUGHFARES. MIXED USE PATHS MAY REQUIRE 8' SIDEWALKS PER LAND DEVELOPMENT CODE.

F) SAWCUT (1/4 THICKNESS MINIMUM) ON 10' CENTERS. IF DRIVE IS WIDER THAN 12', ADD JOINTS AT 10' CENTERS.

CITY OF HOLMES BEACH PUBLIC WORKS DEPARTMENT			**CURB CUT & TRANSITION W/ T-FLARE FOR RESIDENTIAL DRIVES**	**101.2**
REV.BY	DATE			
		DATE OF APPROVAL		

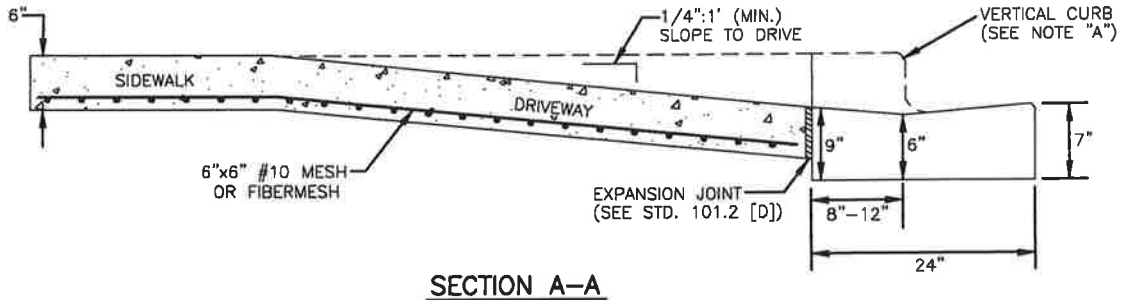

SECTION A–A

NOTE: WIDTH PER LDC. SECTION 8.15B3b

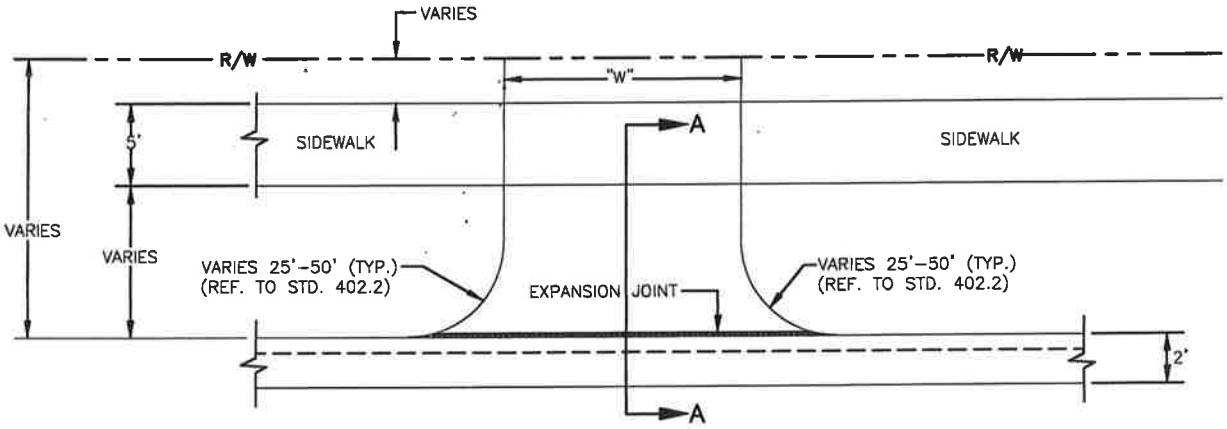

PLAN VIEW

A) IF REPLACING VERTICAL CURB AND GUTTER, REPLACE WITH MIAMI CURB AND GUTTER.
* NO CHANGE WITH 3' VALLEY CROSSING

B) SIDEWALK, CONSTRUCT WITH 6" CONCRETE, 6"X6" #10 MESH OR FIBERMESH, 3000 PSI AT 28 DAYS.

C) DRIVEWAY CONSTRUCTED WITH 6" CONCRETE WITH 6"X6" #10 MESH OR FIBERMESH, 3000 PSI AT 28 DAYS.

D) EXPANSION JOINT 1/2" PREFORMED JOINT FILLER PER FDOT SECTION 932–1.1 OR APPROVED ALTERNATE.
* IF DRIVE IS WIDER THAN 12', ADD JOINTS AT 10' CENTERS

E) 5' SIDEWALK ON LOCAL STREETS, 5' SIDEWALK ON THOROUGHFARES.
(MIXED USE PATHS MAY REQUIRE 8' SIDEWALKS PER LAND DEVELOPMENT CODE.)

CITY OF HOLMES BEACH PUBLIC WORKS DEPARTMENT			COMMERCIAL & INDUSTRIAL DRIVE	101.3
REV.BY	DATE			
		DATE OF APPROVAL		

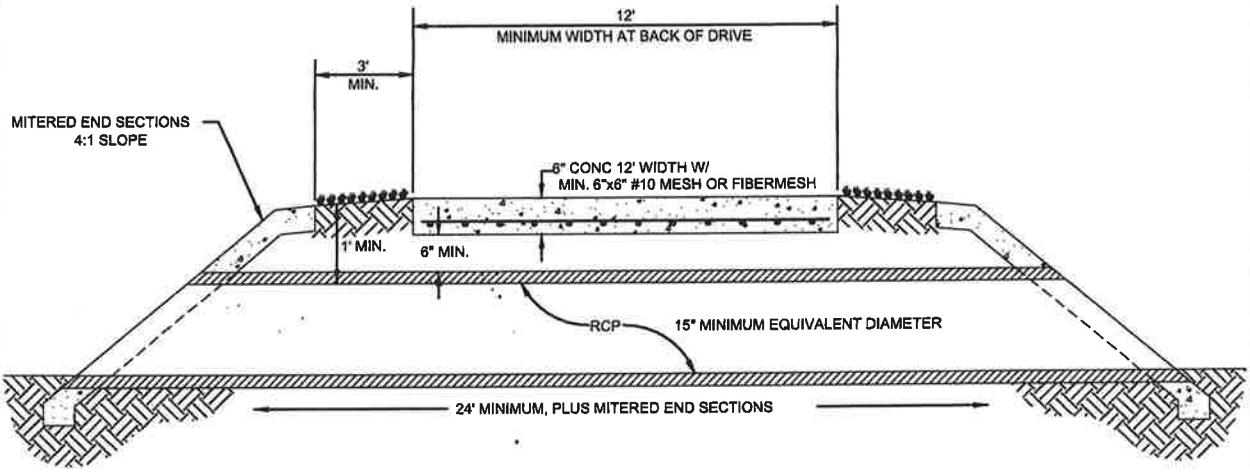

TYPICAL DRIVEWAY

VARIABLES: C.M.P. WILL NOT BE ALLOWED WITHIN THE RIGHT-OF-WAY.
R.C.P. WILL REQUIRE A MINIMUM 6" OF COVER BENEATH BOTTOM OF DRIVEWAY, FOR A TOTAL OF 1' OF COVER. HDPE PIPE IS ACCEPTABLE IN LIEU OF RCP.
ALTERNATIVE DRIVEWAY MATERIALS MAY BE UTILIZED IN ACCORDANCE WITH THESE STANDARDS.

NOTE: 1) GRADES AND LOCATIONS MUST BE REVIEWED AND APPROVED BY PUBLIC WORKS FOR ALL PIPE INSTALLATIONS

2) ACTUAL REQUIRED PIPE DIAMETER WILL BE BASED ON THE FLOW RATE REQUIRED TO PASS THROUGH PIPE SO AS NOT TO IMPOUND WATER UPSTREAM.

3) PIPE SIZE TO BE DETERMINED AND APPROVED BY PUBLIC WORKS.

CITY OF HOLMES BEACH PUBLIC WORKS DEPARTMENT			TYPICAL DRIVEWAY PIPE CROSS SECTION	102.0
REV.BY	DATE			
		DATE OF APPROVAL		

ELIPTICAL PIPE

DIMENSIONS & QUANTITIES

	Rise R	Span S	X	A	B	C	E	F	G	M Single Pipe	M Double Pipe	M Triple Pipe	M Quad. Pipe
2:1 Slope	12"	18"	2'-10"	1.97'	1.62'	3.59'	1.56'	4'	1.50'	4.92'	7.75'	10.58'	13.42'
	14"	23"	3'-4"	2.01'	1.99'	4.00'	1.89'	5'	1.90'	5.38'	8.71'	12.04'	15.38'
	19"	30"	4'-0"	2.11'	2.92'	5.03'	2.73'	6'	2.37'	6.04'	10.04'	14.04'	18.04'
	24"	38"	5'-0"	2.20'	3.85'	6.05'	3.56'	7'	2.85'	6.79'	11.79'	16.79'	21.79'
	29"	45"	5'-11"	2.34'	4.79'	7.13'	4.39'	8'	3.19'	7.50'	13.42'	19.33'	25.25'
	34"	53"	7'-0"	2.43'	5.72'	8.15'	5.23'	9'	3.57'	8.25'	15.25'	22.25'	29.25'
	38"	60"	7'-10"	2.52'	6.46'	8.98'	5.89'	9'	3.95'	8.92'	16.75'	24.58'	32.42'
	43"	68"	8'-11"	2.62'	7.39'	10.01'	6.73'	10'	4.28'	9.67'	18.58'	27.50'	36.42'
	48"	76"	9'-11"	2.71'	8.33'	11.04'	7.56'	11'	4.59'	10.42'	20.33'	30.25'	40.17'
	53"	83"	10'-8"	2.80'	9.26'	12.06'	8.39'	12'	4.77'	11.08'	21.75'	32.42'	43.08'
	58"	91"	11'-8"	2.90'	10.19'	13.09'	9.23'	13'	5.01'	11.83'	23.50'	35.17'	46.83'
4:1 Slope	12"	18"	2'-10"	2.36'	3.06'	5.42'	3.03'	5'	1.50'	4.92'	7.75'	10.58'	13.42'
	14"	23"	3'-4"	2.44'	3.75'	6.19'	3.70'	6'	1.90'	5.38'	8.71'	12.04'	15.38'
	19"	30"	4'-0"	2.62'	5.47'	8.09'	5.36	8'	2.37'	6.04'	10.04'	14.04'	18.04'
	24"	38"	5'-0"	2.79'	7.18'	9.97'	7.03'	10'	2.85'	6.79'	11.79'	16.79'	21.79'
	29"	45"	5'-11"	3.05'	8.90'	11.95'	8.70'	12'	3.19'	7.50'	13.42'	19.33'	25.25'
	34"	53"	7'-0"	3.22'	10.62'	13.84'	10.36'	13'	3.57'	8.25'	15.25'	22.25'	29.25'
	38"	60"	7'-10"	3.39'	11.99'	15.38'	11.70'	15'	3.95'	8.92'	16.75'	24.58'	32.42'
	43"	68"	8'-11"	3.56'	13.71'	17.27'	13.36'	17'	4.28'	9.67'	18.58'	27.50'	36.42'
	48"	76"	9'-11"	3.73'	15.43'	19.16'	15.03'	19'	4.59'	10.42'	20.33'	30.25'	40.17'
	53"	83"	10'-8"	3.91'	17.15'	21.06'	16.70'	20'	4.77'	11.08'	21.75'	32.42'	43.08'
	58"	91"	11'-8"	4.08'	18.87'	22.95'	18.36'	22'	5.01'	11.83'	23.50'	35.17'	46.83'

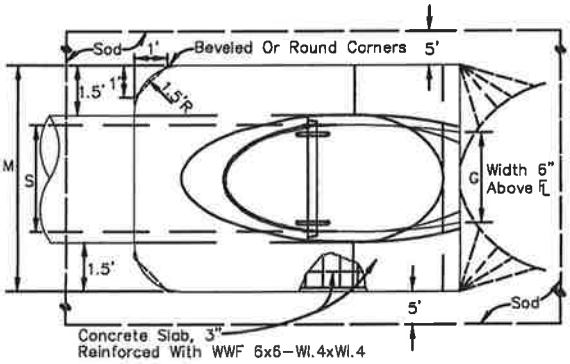

TOP VIEW—SINGLE PIPE

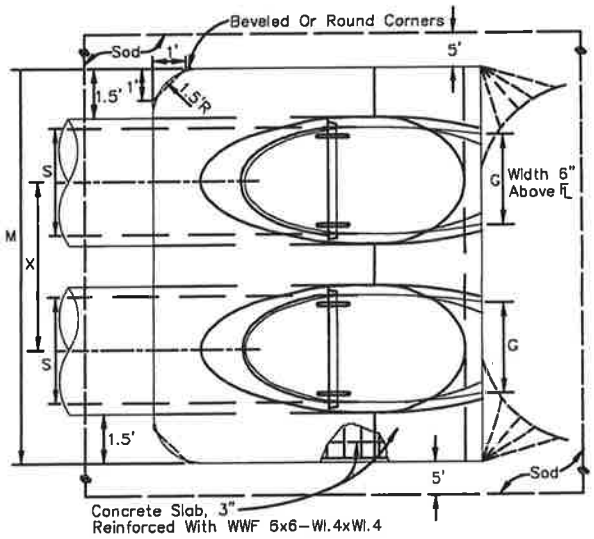

TOP VIEW—MULTIPLE PIPE

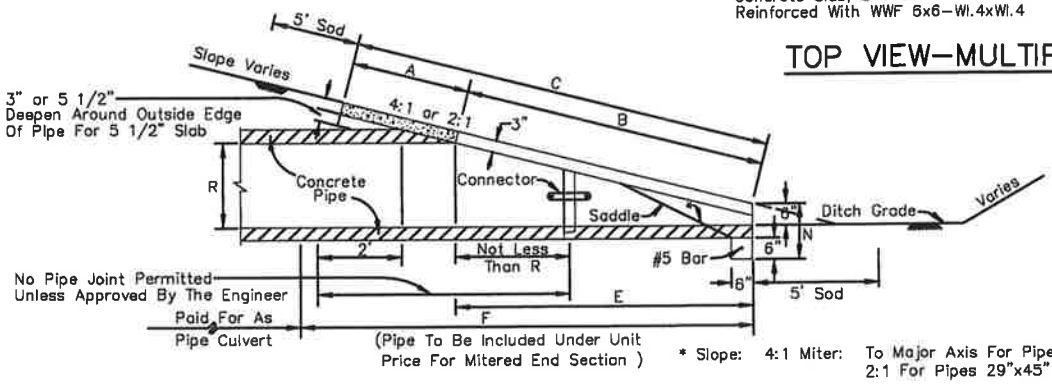

* Slope: 4:1 Miter: To Major Axis For Pipes 24"x38" And Smaller.
2:1 For Pipes 29"x45" And Larger.

2:1 Miter: To Major Axis For Pipes 29"x45" And Smaller.
1:1 For Pipes 34"x53" And Larger.

SECTION

CITY OF HOLMES BEACH
PUBLIC WORKS DEPARTMENT

REV.BY	DATE

DATE OF APPROVAL

MITERED END SECTION FOR ELIPTICAL, SINGLE, AND MULTIPLE PIPES

102.1

ROUND PIPE

	DIMENSIONS AND QUANTITIES											
									M			
	D	X	A	B	C	E	F	G	Single Pipe	Double Pipe	Triple Pipe	Quad. Pipe
2:1 Slope	15"	2'-7"	1.92'	2.18'	4.10'	2.06'	5'	1.22'	4.63'	7.21'	9.79'	12.37'
	18"	2'-10"	1.97'	2.74'	4.71'	2.56'	6'	1.41'	4.92'	7.75'	10.58'	13.42'
	24"	3'-5"	2.06'	3.85'	5.91'	3.56'	7'	1.73'	5.50'	8.92'	12.33'	15.75'
	30"	4'-3"	2.15'	4.95'	7.10'	4.56'	8'	2.00'	6.08'	10.33'	14.58'	18.83'
	36"	5'-1"	2.25'	6.08'	8.33'	5.56'	9'	2.24'	6.67'	11.75'	16.83'	21.92'
	42"	6'-0"	2.34'	7.21'	9.55'	6.56'	10'	2.45'	7.25'	13.25'	19.25'	25.25'
	48"	6'-9"	2.43'	8.33'	10.76'	7.56'	11'	2.65'	7.83'	14.58'	21.33'	28.08'
	54"	7'-8"	2.52'	9.44'	11.96'	8.56'	12'	2.83'	8.42'	16.08'	23.75'	31.42'
	60"	8'-6"	2.62'	10.56'	13.18'	9.56'	14'	3.00'	9.00'	17.50'	26.00'	34.50'
	66"	9'-2"	2.71'	11.68'	14.39'	10.56'	15'	3.18'	9.58'	18.75'	27.92'	37.08'
	72"	10'-0"	2.80'	12.80'	15.60'	11.56'	16'	3.30'	10.16'	20.16'	30.16'	40.16'
4:1 Slope	15"	2'-7"	2.27'	4.09'	6.36'	4.03'	8'	1.22'	4.63'	7.21'	9.79'	12.37'
	18"	2'-10"	2.36'	5.12'	7.48'	5.03'	9'	1.41'	4.92'	7.75'	10.58'	13.42'
	24"	3'-5"	2.53'	7.18'△	9.71'	7.03'△	11'	1.73'	5.50'	8.92'	12.33'	15.75'
	30"	4'-3"	2.70'	9.25'	11.95'	9.03'	13'	2.00'	6.08'	10.33'	14.58'	18.83'
	36"	5'-1"	2.87'	11.31'◇	14.18'	11.03'◇	15'	2.24'	6.67'	11.75'	16.83'	21.92'
	42"	6'-0"	3.05'	13.37'	16.42'	13.03'	17'	2.45'	7.25'	13.25'	19.25'	25.25'
	48"	6'-9"	3.22'	15.43'	18.65'	15.03'	19'	2.65'	7.83'	14.58'	21.33'	28.08'
	54"	7'-8"	3.39'	17.49'	20.88'	17.03'	21'	2.83'	8.42'	16.08'	23.75'	31.42'
	60"	8'-6"	3.56'	19.55'	23.11'	19.03'	23'	3.00'	9.00'	17.50'	26.00'	34.50'
	66"	9'-2"	3.73'	21.62'	25.35'	21.03'	25'	3.18'	9.58'	18.75'	27.92'	37.08'
	72"	10'-0"	3.91'	22.68'	26.59'	23.03'	27'	3.30'	10.16'	20.16'	30.16'	40.16'

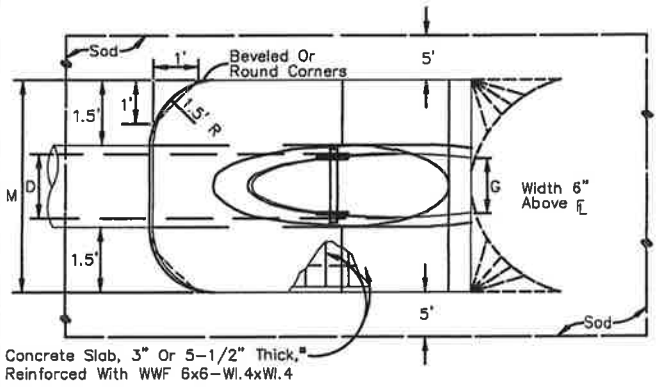

TOP VIEW—SINGLE PIPE

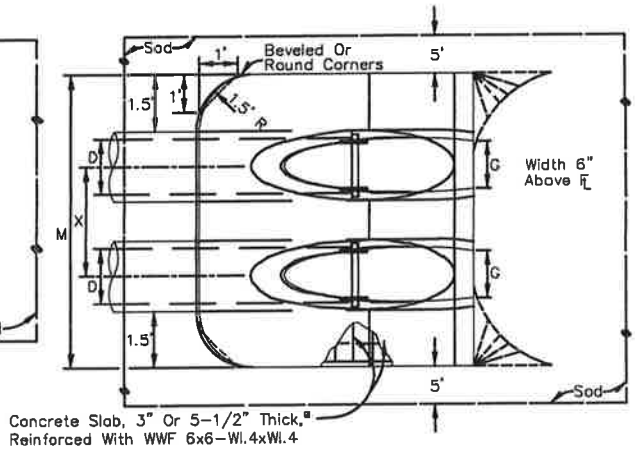

TOP VIEW—MULTIPLE PIPE

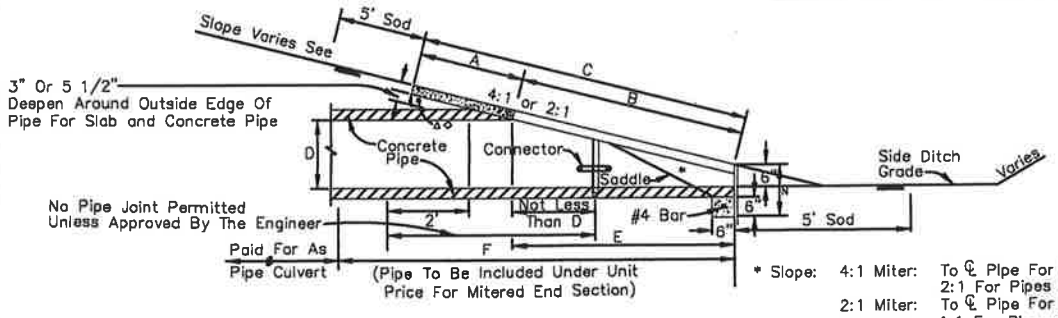

* Slope: 4:1 Miter: To ℄ Pipe For Pipes 18" And Smaller. 2:1 For Pipes 24" And Larger.
2:1 Miter: To ℄ Pipe For Pipes 18" And Smaller. 1:1 For Pipes 24" And Larger.

SECTION

CITY OF HOLMES BEACH PUBLIC WORKS DEPARTMENT			MITERED END SECTION FOR ROUND, SINGLE & MULTIPLE PIPES	102.2
REV.BY	DATE			
		DATE OF APPROVAL		

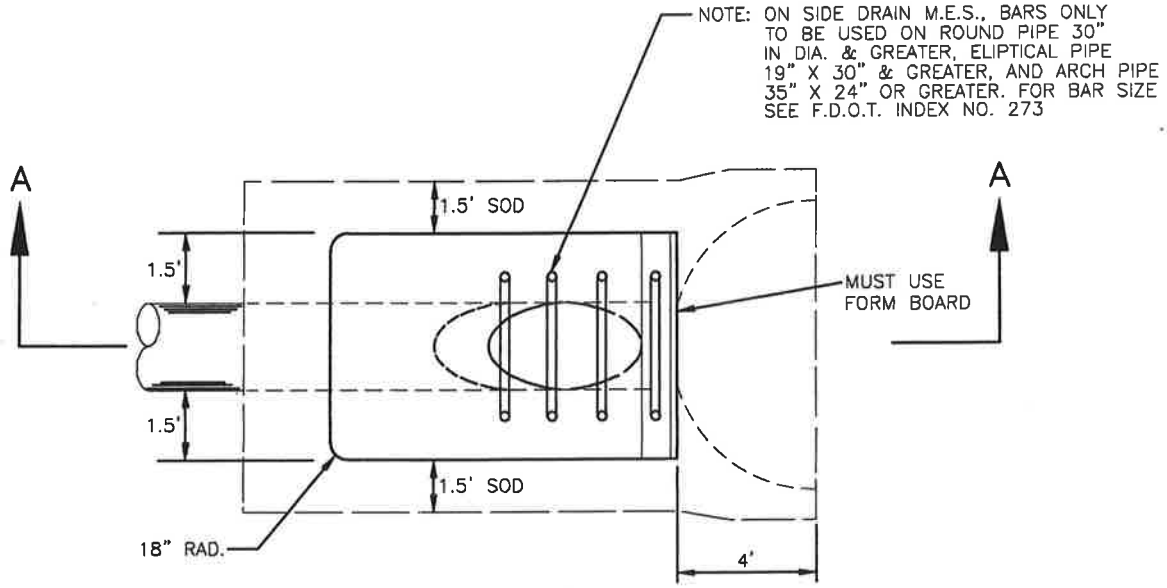

PLAN VIEW

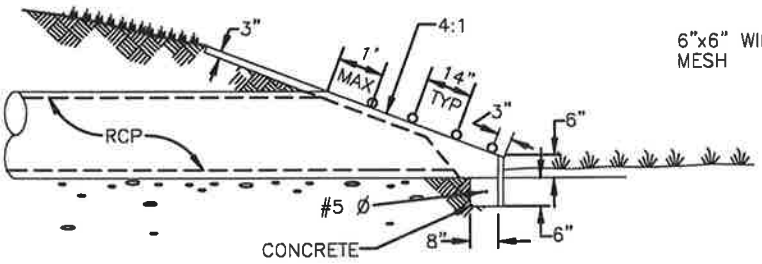

SECTION A–A

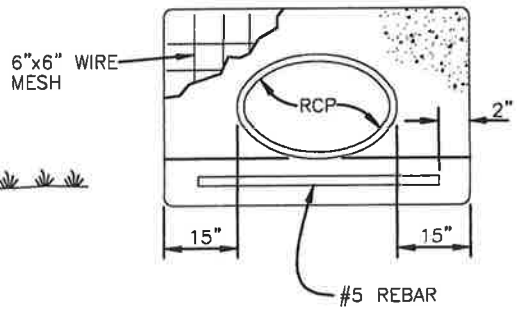

END VIEW

SOD TO BE PLACED 1.5 FT AROUND THE PERIMETER OF THE WALL, SOD TO BE BAHIA; ST. AUGUSTINE SOD WHERE THERE IS TIDAL, HEAVY CONCENTRATION OF SALT, OR SURROUNDING PROPERTY IS ST. AUGUSTINE.

CITY OF HOLMES BEACH PUBLIC WORKS DEPARTMENT			DRIVEWAY AND ROAD PIPE MITERED END SECTION	103.0
REV.BY	DATE			
		DATE OF APPROVAL		

NOTE: FILTER FABRIC NOT REQUIRED WHEN AN O-RING GASKET IS USED.

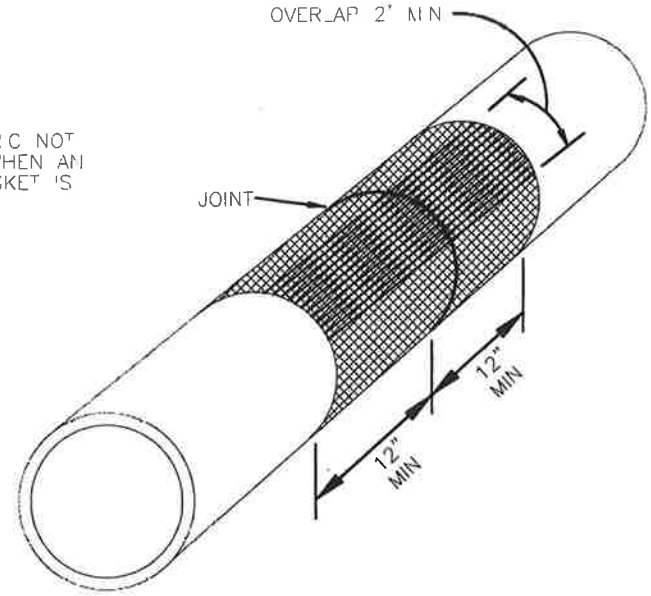

ISOMETRIC VIEW

NOTE: FILTER FABRIC MATERIAL MUST MEET THE FOLLOWING ASTM REQUIREMENTS:

ASTM D 4595
ASTM D 4632
ASTM D 4533
ASTM D 4833
ASTM D 4491

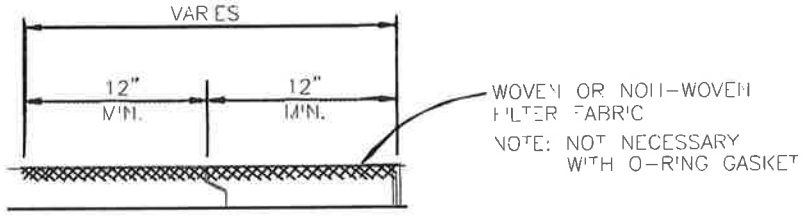

BUTT JOINT

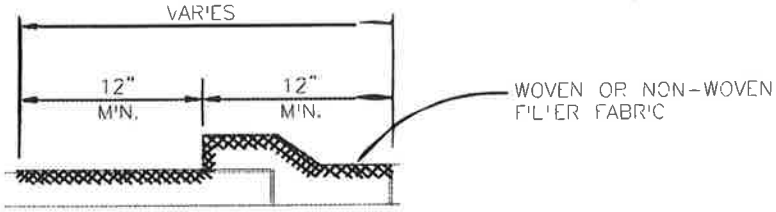

BELL JOINT

CITY OF HOLMES BEACH PUBLIC WORKS DEPARTMENT			FILTER FABRIC JACKET	104.0
REV.BY	DATE			
		DATE OF APPROVAL		

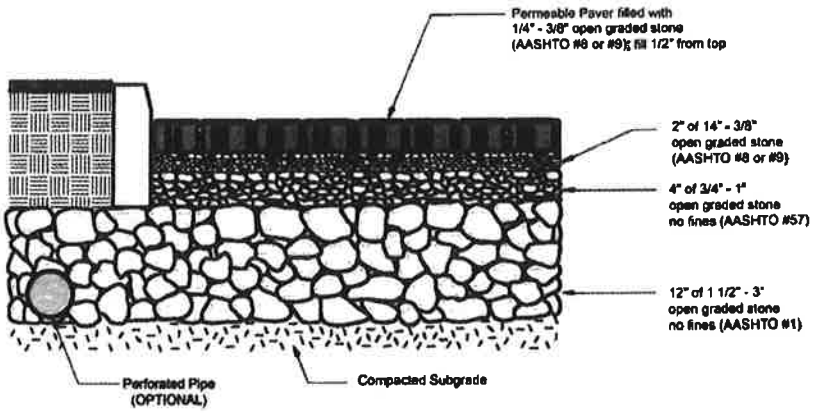

1. 6" POURED CONCRETE BOND BAND SHALL BE INSTALLED WHERE CURB IS NOT PRESENT WITH 3/4" REVEAL AT EDGE OF TRAVEL WAY.
2. 6" POURED CONCRETE BOND BAND SHALL BE INSTALLED ON ALL OUTSIDE EDGES WHERE NO EXISTING OR NEW SOLID STRUCTURE IS PRESENT TO HOLD PAVERS IN PLACE.
3. ALL PAVERS WITHIN TRAFFIC AREAS MUST BE TRAFFIC BEARING.
4. A RIGHT OF WAY USE PERMIT AND AN APPROVED LICENSE AGREEMENT MUST BE OBTAINED IF PAVERS ARE TO BE INSTALLED IN CITY RIGHT OF WAY.
5. PAVER INSTALLATION SPECIFICATIONS APPLY TO PUBLIC AND PRIVATE IMPROVEMENTS EXCEPT FOR NON-TRAFFIC BEARING SIDEWALKS CONSTRUCTED ENTIRELY ON PRIVATE PROPERTY.
6. DRIVEWAY REPAIRS DUE TO FUTURE RIGHT OF WAY UTILITY AND/OR ROAD WORK ARE THE FULL RESPONSIBILITY OF THE OWNER.

PERMEABLE PAVER INSTALLATION DETAIL

N.T.S.

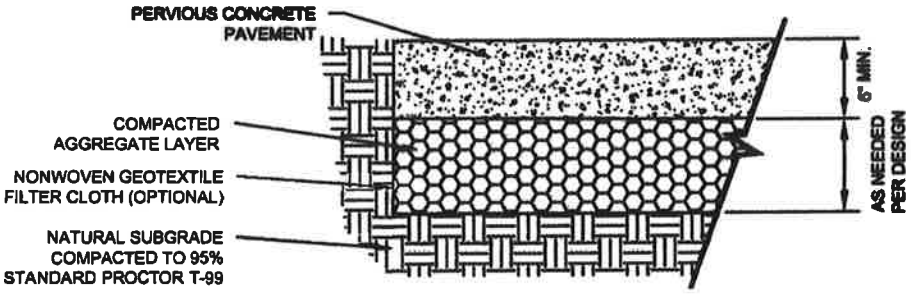

1. FOR USE IN PARKING AREAS AND LOW VOLUME ACCESSWAYS ONLY.
2. ENGINEER OF RECORD SHALL SUBMIT PERVIOUS PAVEMENT DESIGN AND SPECIFICATIONS BASED ON THE SITE SPECIFIC SOIL CONDITIONS, STORMWATER STORAGE REQUIREMENTS AND THE ANTICIPATED TRAFFIC LOADINGS.
3. PERVIOUS CONTRACTORS SHALL BE NRMCA CERTIFIED CRAFTSMEN.
4. PERVIOUS PRODUCER/SUPPLIERS AND TESTING FIRMS SHALL USE NRMCA CERTIFIED TECHNICIANS.
5. POROUS ASPHALT MAY BE USED AS AN ALTERNATIVE MATERIAL AS DESIGNED BY THE EOR.
6. A RIGHT OF WAY USE PERMIT AND AN APPROVED LICENSE AGREEMENT MUST BE OBTAINED.IF PAVERS ARE TO BE INSTALLED IN CITY RIGHT OF WAY.
7. DRIVEWAY REPAIRS DUE TO FUTURE RIGHT OF WAY UTILITY AND/OR ROAD WORK ARE THE FULL RESPONSIBILITY OF THE OWNER

PERVIOUS CONCRETE PAVEMENT DETAIL

N.T.S.

CITY OF HOLMES BEACH PUBLIC WORKS DEPARTMENT			PAVER AND PERVIOUS CONCRETE	105.0
REV.BY	DATE			
		DATE OF APPROVAL		

CURB & GUTTER AND DRAINAGE STRUCTURES & PIPE INDEX

	SHEET NO.
200 CURB & GUTTER, DRAINAGE	200.0
A. CURB & GUTTER (CONTROL SHEET)	201.0
1. TYPE "A" MIAMI CURB & GUTTER	201.1
2. TYPE "F"	201.2
3. MODIFIED TYPE "AB"	201.3
4. TYPE "D"	201.4
5. INVERTED CROWN GUTTER	201.5
6. VALLEY CROSSING	201.6
B. DRAINAGE (CONTROL SHEET)	202.0
1. TYPICAL CONCRETE BLOCK BOX	202.1
2. CURB INLET	202.2
3. DROP INLET	202.3
4. NON TRAFFIC BEARING GRATE INLET	202.4
5. TRAFFIC BEARING GRATE INLET	202.5
6. ACCESS COVER FOR STORMWATER JUNCTION BOX (PRIVATE)	203.0
7. ACCESS COVER FOR STORMWATER JUNCTION BOX (PUBLIC)	203.1
8. ACCESS COVER FOR CATCH BASIN AND THROAT INLET (PUBLIC)	203.2
9. UNDERDRAIN GENERAL NOTES	204.0
10. UNDERDRAIN TYPICAL LAYOUT	204.1
11. UNDERDRAIN CLEANOUTS (FLEXIBLE & RIGID)	204.2
12. STORM SEWER PIPE – GENERAL NOTES	205.0
13. CONCRETE BLOCK HEADWALL	205.1

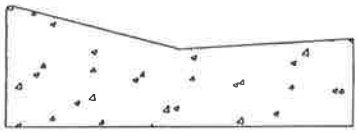

TYPE "A"
MIAMI CURB & GUTTER
STD. 201.1

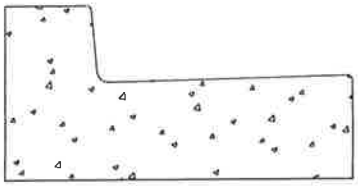

TYPE "F"
CURB & GUTTER
STD. 201.2

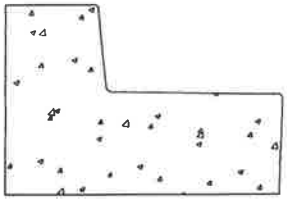

TYPE "AB"
MODIFIED CURB & GUTTER
STD. 201.3

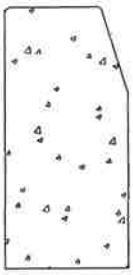

TYPE "D"
CURB
STD. 201.4

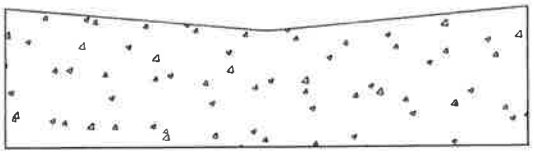

INVERTED CROWN
CURB & GUTTER
STD. 201.5

1. ALL CURB & GUTTER SHALL PROVIDE A 0.125" TO 0.25" CONTRACTION JOINT AT 10' CENTERS.
2. ALL CURB & GUTTER SHALL BE CONSTRUCTED IN COMPLIANCE WITH FLORIDA D.O.T. STANDARD SPECIFICATIONS PER F.D.O.T. ROADWAY AND TRAFFIC DESIGN STANDARDS INDEX NO. 300, LATEST REVISION.
3. TOP OF FINISHED PAVEMENT SHALL BE 0.25" ABOVE LIP OF GUTTER, LOW SIDE.

CITY OF HOLMES BEACH PUBLIC WORKS DEPARTMENT			CURB & GUTTER CONTROL SHEET	201 .0
REV.BY	DATE			
		DATE OF APPROVAL		

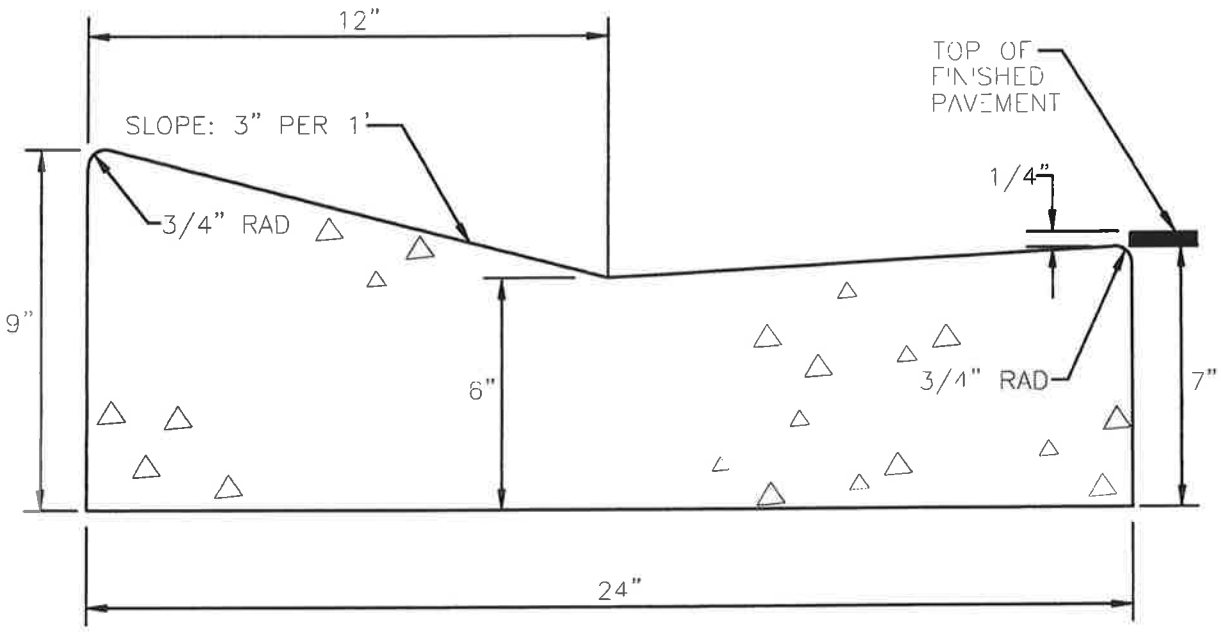

TYPE "A"
MIAMI CURB & GUTTER

A) CLASS 1 CONCRETE 3,000 P.S.I. AT 28 DAYS.

B) CURB AND GUTTER SHALL MEET THE SPECIFICATIONS ESTABLISHED BY FLORIDA D.O.T. STANDARD SPECIFICATIONS PER F.D.O.T. ROADWAY AND TRAFFIC DESIGN STANDARDS INDEX NO. 300, LATEST REVISION.

CITY OF HOLMES BEACH PUBLIC WORKS DEPARTMENT			TYPE A MIAMI CURB & GUTTER	201.1
REV.BY	DATE			
		DATE OF APPROVAL		

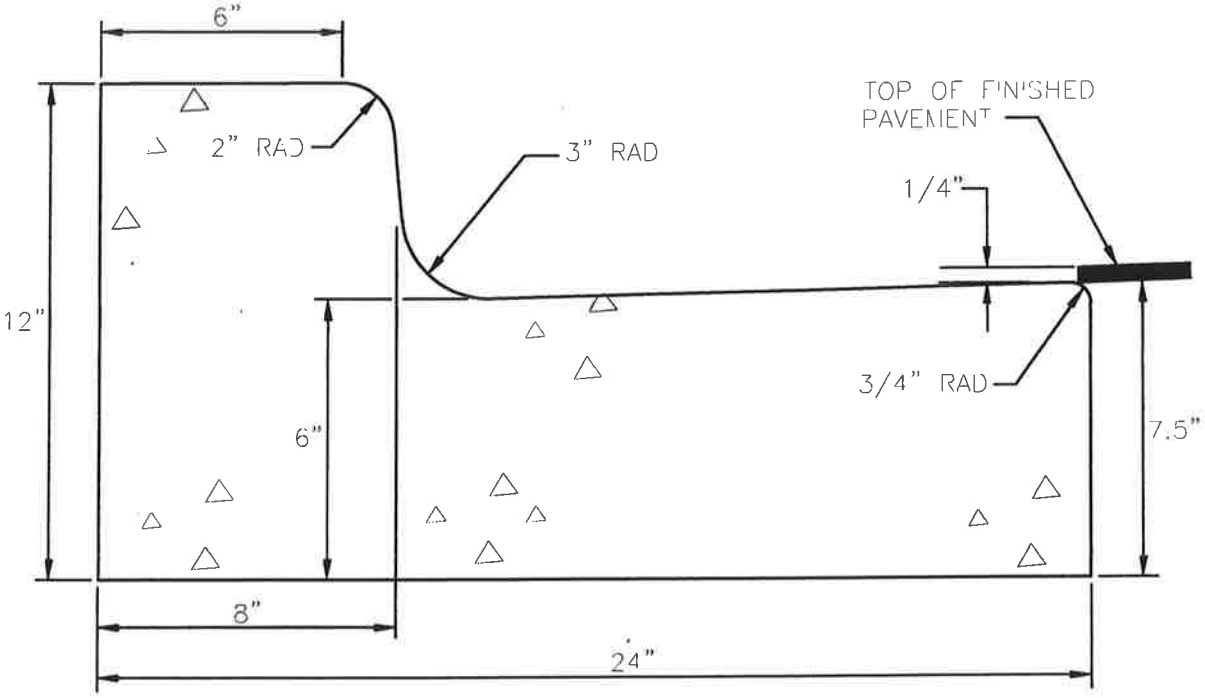

TYPE "F" BARRIER CURB & GUTTER

A) CLASS 1 CONCRETE 3,000 P.S.I. AT 28 DAYS.

B) CURB AND GUTTER SHALL MEET THE SPECIFICATIONS ESTABLISHED BY FLORIDA D.O.T. STANDARD SPECIFICATIONS PER F.D.O.T. ROADWAY AND TRAFFIC DESIGN STANDARDS INDEX NO. 300, LATEST REVISION.

CITY OF HOLMES BEACH PUBLIC WORKS DEPARTMENT			TYPE F CURB & GUTTER	201.2
REV.BY	DATE			
		DATE OF APPROVAL		

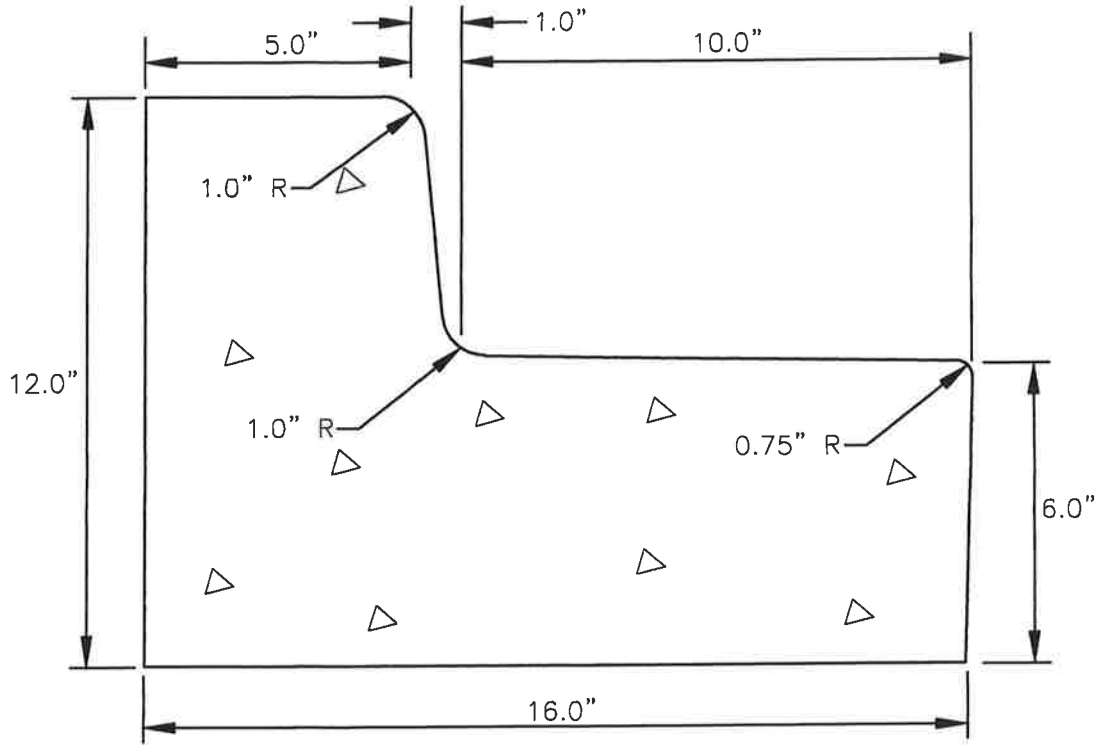

TYPE "AB"
MODIFIED CURB & GUTTER

A) CLASS 1 CONCRETE 3,000 PSI AT 28 DAYS.

B) CURB AND GUTTER SHALL MEET THE SPECIFICATIONS ESTABLISHED BY FLORIDA D.O.T. STANDARD SPECIFICATIONS PER F.D.O.T. ROADWAY AND TRAFFIC DESIGN STANDARDS STANDARDS INDEX NO. 300, LATEST REVISION.

CITY OF HOLMES BEACH PUBLIC WORKS DEPARTMENT			TYPE "AB" MODIFIED CURB & GUTTER	201.3
REV.BY	DATE			
		DATE OF APPROVAL		

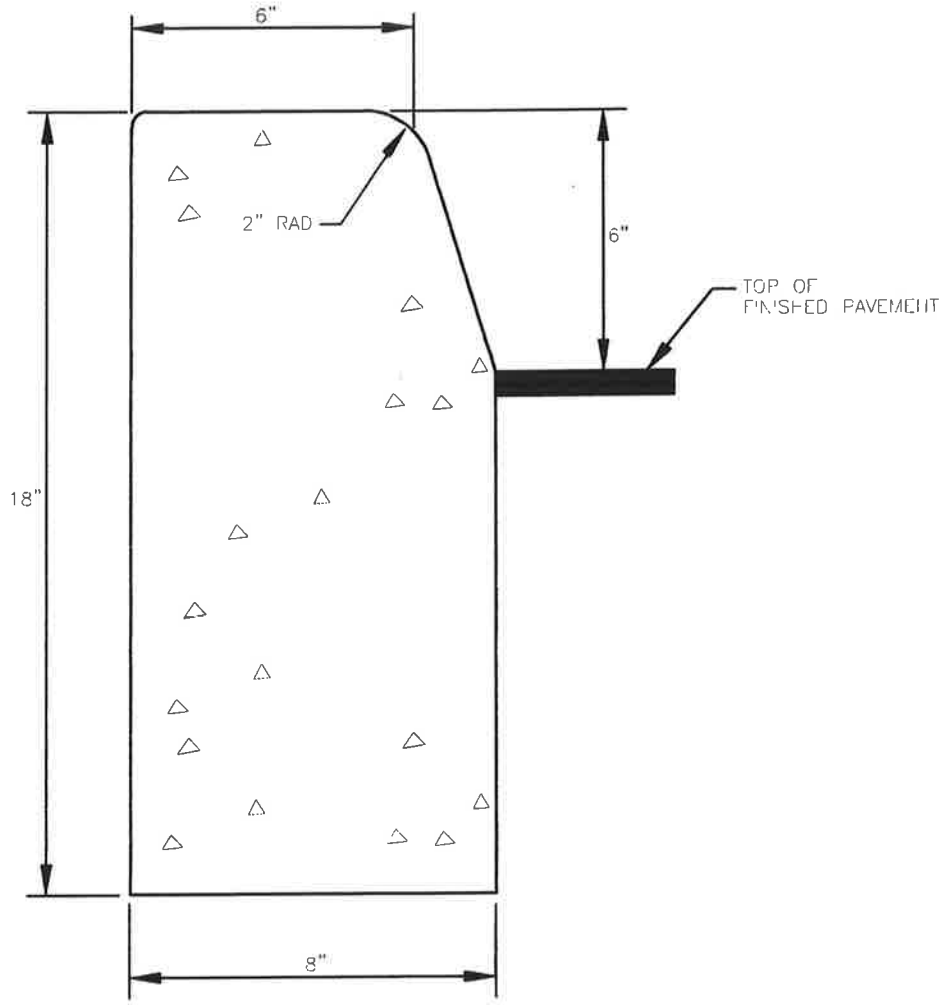

TYPE "D"
HIGH BACK CURB

A) CLASS 1 CONCRETE, 3,000 P.S.I. AT 28 DAYS.

B) CURB SHALL MEET THE SPECIFICATIONS ESTABLISHED BY F.D.O.T. STANDARD SPECIFICATIONS PER F.D.O.T. ROADWAY AND TRAFFIC DESIGN STANDARDS INDEX NO. 300, LATEST REVISION.

CITY OF HOLMES BEACH PUBLIC WORKS DEPARTMENT			TYPE D CURB	201.4
REV.BY	DATE			
		DATE OF APPROVAL		

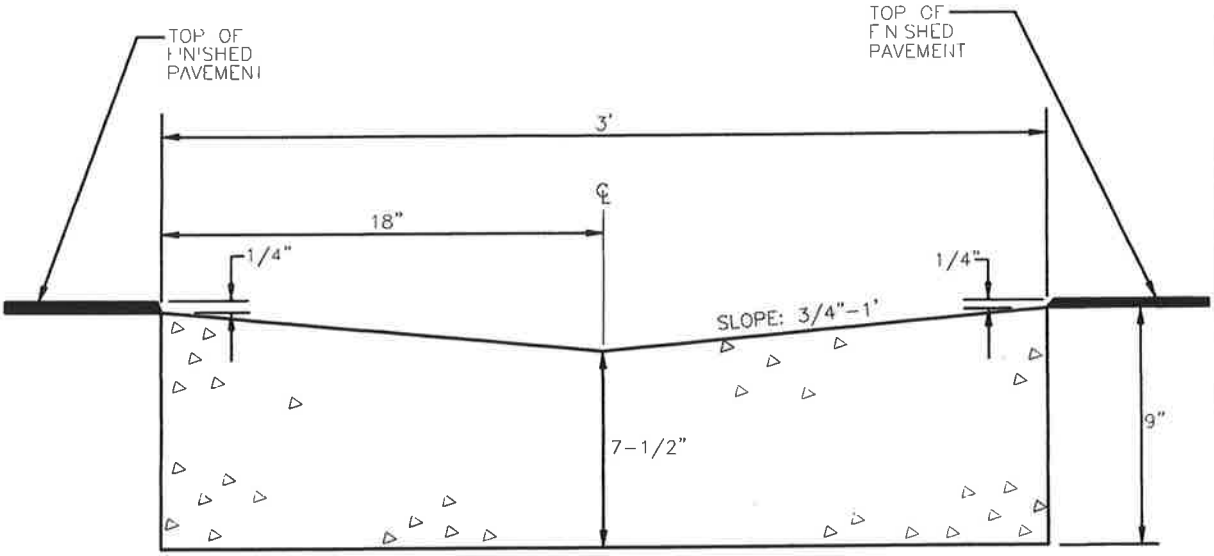

INVERTED CROWN GUTTER

A) CLASS 1 CONCRETE, 3,000 P.S.I. AT 28 DAYS.

B) CURB SHALL MEET SPECIFICATIONS ESTABLISHED BY FLORIDA D.O.T. STANDARD SPECIFICATIONS, PER F.D.O.T. ROADWAY AND TRAFFIC DESIGN STANDARDS INDEX NO. 300, LATEST REVISION.

C) SEE SHEET 401.9 FOR INVERTED CROWN APPLICATION.

NOTE: THIS TYPICAL SECTION SHALL BE CONSIDERED FOR PRIVATE ROAD USAGE ONLY! IT MUST BE APPROVED THRU THE PLANNING & TRANSPORTATION DEPARTMENTS, JOINTLY.

CITY OF HOLMES BEACH PUBLIC WORKS DEPARTMENT			INVERTED CROWN	201 .5
REV.BY	DATE			
		DATE OF APPROVAL		

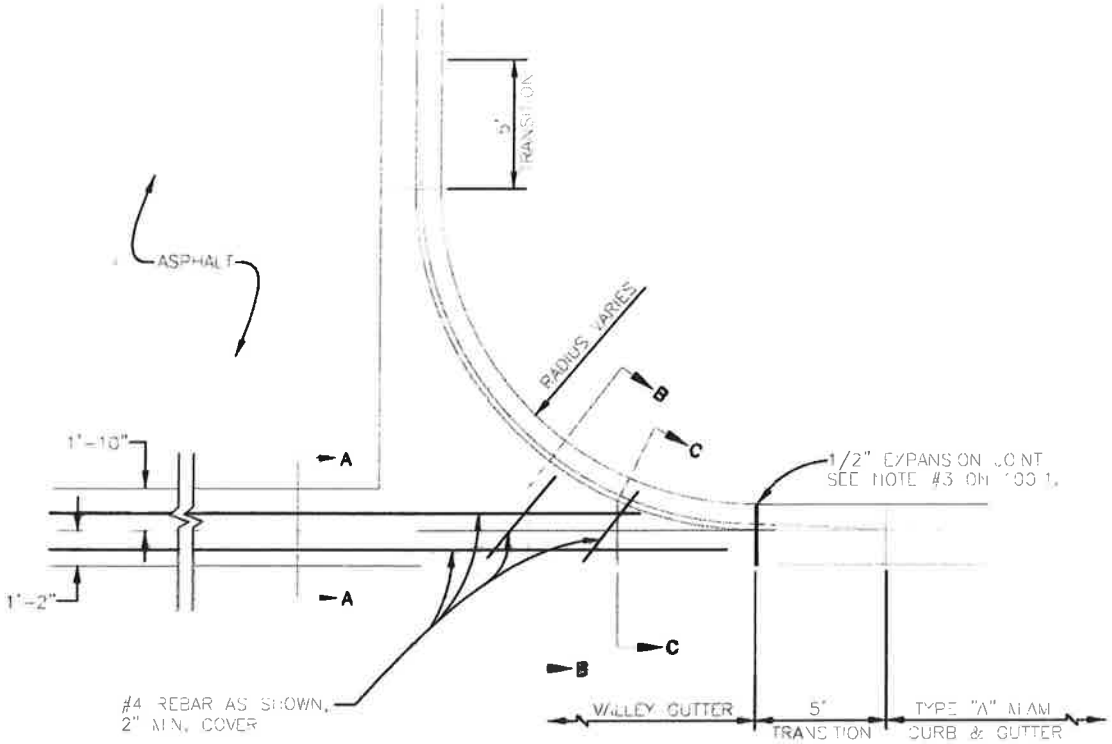

PLAN VIEW

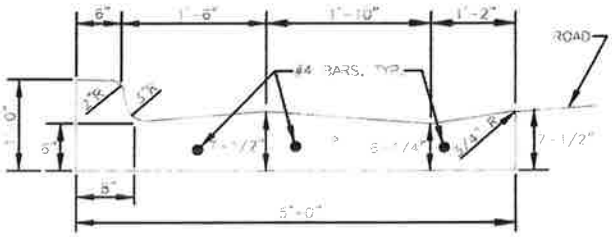

SECTION "B–B"

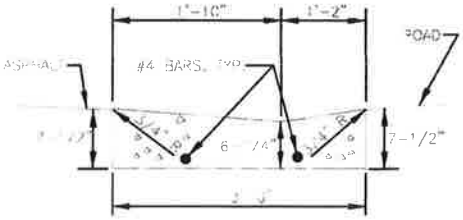

SECTION "A–A"

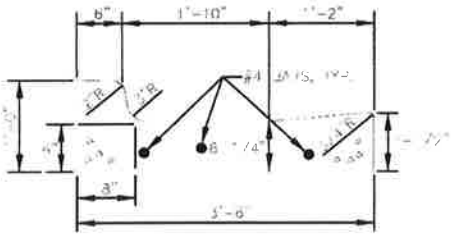

SECTION "C–C"

3' VALLEY CROSSING

* CLASS I CONCRETE, 3,000 P.S.I. AT 28 DAYS.

CITY OF HOLMES BEACH PUBLIC WORKS DEPARTMENT		
REV. BY | DATE	**VALLEY CROSSING**	**201.6**
DATE OF APPROVAL		

GENERAL NOTES

1. ALL REFERENCED STANDARDS SHALL BE LATEST REVISION.
2. CONCRETE SHALL BE CLASS "1" AS SPECIFIED IN SECTION 345 OF F.D.O.T. SPECIFICATIONS
3. SEE SECTION 425-2.2 "MORTAR" OF FLORIDA D.O.T. SPECIFICATIONS.
4. IRON CASTING SHALL BE AS SPECIFIED IN SECTION 962-8 OF F.D.O.T. SPECIFICATIONS. SEE SECTION 425-5.
5. ALL REINFORCEMENT STEEL SHALL BE AS SPECIFIED IN SECTIONS 415 & 931.1 OF F.D.O.T. SPECIFICATIONS.
6. SEE FLORIDA D.O.T. SPECIFICATIONS FOR GRATINGS.
7. SEE FLORIDA D.O.T. SPECIFICATIONS FOR SECTION 125 "EXCAVATION FOR STRUCTURES."
8. PRECAST TOP AND BOTTOM TO BE F.D.O.T. STANDARDS WITH MINIMUM TRAFFIC BEARING 8" THICKNESS.
9. ALL STORMWATER PIPE SHALL BE INSTALLED BEHIND THE CURB OR EDGE OF PAVEMENT AND WITHIN THE RIGHT OF WAY AND WITHIN THE DRAINAGE EASEMENTS.
10. THE FOLLOWING IS THE DRAINAGE STRUCTURE WALL MINIMUM THICKNESS:

PRECAST	BLOCK
NON-TRAFFIC 6"	8" EITHER WAY

NOTE: FOR DRAINAGE STRUCTURES WITH PIPE DIAMETERS UP TO AND INCLUDING 24", 6" PRECAST WALLS ARE ACCEPTABLE FOR TRAFFIC BEARING.

DIMENSION INDEX

PIPE SIZE	TYPE	"C"	"D"	"E"	"F"	"G"	"H"
15"	RCP	2'8"	4'	5'	4'	5'4"	6'4"
12"x18"	RCP	"	"	"	"	"	"
18"	RCP	"	"	"	"	"	"
14"x23"	RCP	"	"	"	"	"	"
24"	RCP	3'4"	4'8"	5'8"	"	"	"
19"x30"	RCP	4'	5'4"	6'4"	"	"	"
30"	RCP	"	"	"	"	"	"
24"x38"	RCP	5'	6'4"	7'4"	"	"	"
36"	RCP	5'	6'4"	"	"	"	"
66"	RCP	8'5"	9'9"	10'9"	4'8"	6'0"	7'0"

CITY OF HOLMES BEACH
PUBLIC WORKS DEPARTMENT

REV. BY	DATE

DATE OF APPROVAL

DRAINAGE CONTROL SHEET

202.0

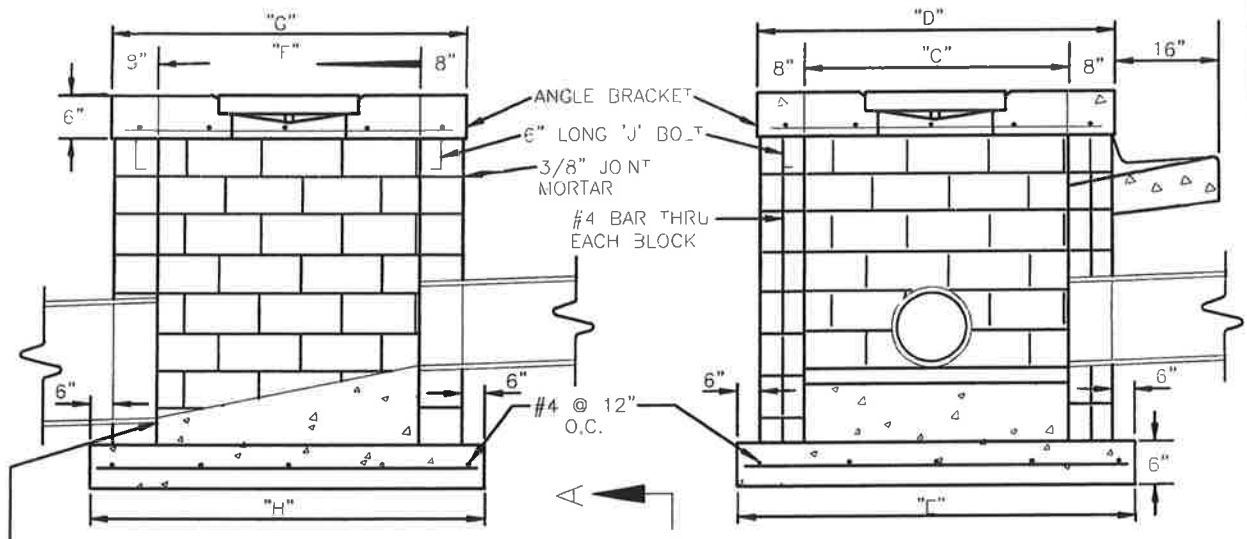

SECTION "A–A"

SECTION "B–B"

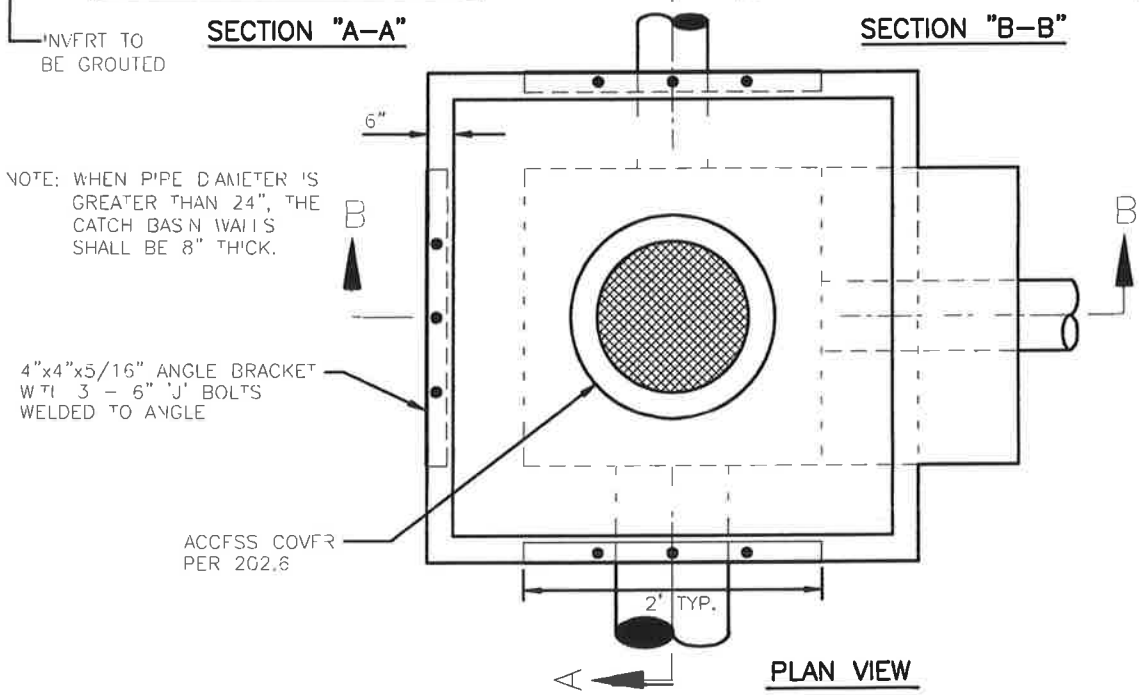

PLAN VIEW

NOTE: DIMENSIONS PER SECTION 202.0

A) THE FOLLOWING MATERIALS TO BE AS SPECIFIED IN THE FLORIDA D.O.T. SPEC'S. 1991, SECTION 346 CONCRETE, SECT. 962–8 IRON CASTING, SECT. 93'–1 REINFORCEMENT STEEL, SECT. 425 INLETS, MANHOLES & JUNCTION BOXES.

B) FILL BLOCKS WITH 3,000 psi CONCRETE, USE #4 ROD IN EACH BLOCK, 16" O/C.

C) 2" MINIMUM COVER ON ALL REBAR.

D) USE #4 REBARS ON 6" CENTERS BOTH WAYS ON LID; NO.4 REBARS ON 12" CENTERS BOTH WAYS ON FLOOR SLAB.

E) SEE SHEET 202.0 FOR GENERAL NOTES AND DIMENSION INDEX.

F) ALL EXPOSED CORNERS AND EDGES TO BE CHAMFERED 3/4".

G) PRECAST BOXES AS SPECIFIED IN F.D.O.T. ROADWAY AND TRAFFIC DESIGN STANDARDS (2000) ARE AN ACCEPTABLE ALTERNATIVE AS APPROVED BY THE TRANSPORTATION DIRECTOR OR HIS DESIGNEE.

H) ALL PIPE ENTRIES TO CATCH BASIN TO BE GROUTED AND SEALED.

CITY OF HOLMES BEACH PUBLIC WORKS DEPARTMENT			TYPICAL CONC. BLOCK BOX	202.1
REV. BY	DATE			
		DATE OF APPROVAL		

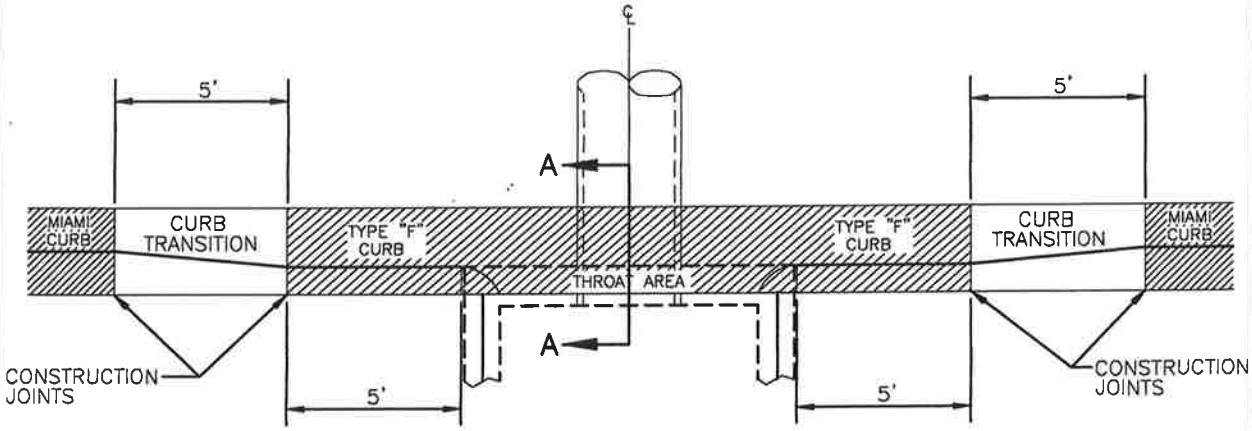

PLAN VIEW

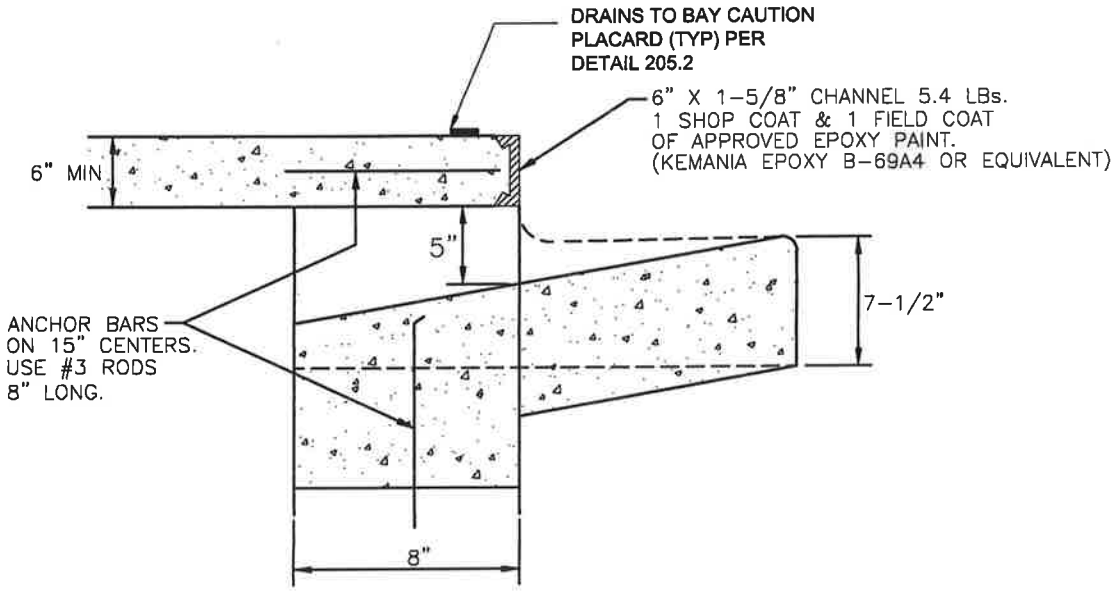

SECTION A–A

A) USE STANDARD CATCH BASIN & JUNCTION BOX DIMENSION INDEX (SHEET # 202.0) DETAILS AND COVER (SHEET # 202.6).

B) SEE CURB & GUTTER INDEX (SHEET # 201.0) FOR APPLICABLE CURB TYPE.

C) SEE SHEET # 202.0 "GENERAL NOTES" FOR APPLICABLE INFORMATION.

D) PRECAST BOXES AS SPECIFIED IN F.D.O.T. ROADWAY AND TRAFFIC DESIGN STANDARDS (2006) ARE AN ACCEPTABLE ALTERNATIVE AS APPROVED BY THE DIRECTOR OR HIS DESIGNEE.

E) ANGLE BRACKETS SHOWN ON 202.1 NOT REQUIRED.

CITY OF HOLMES BEACH PUBLIC WORKS DEPARTMENT			CURB INLET	202.2
REV.BY	DATE			
		DATE OF APPROVAL		

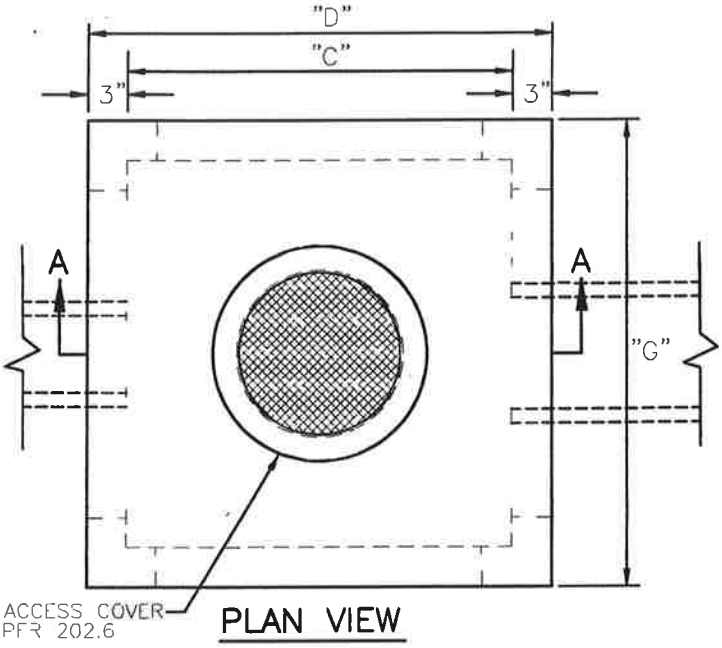

PLAN VIEW

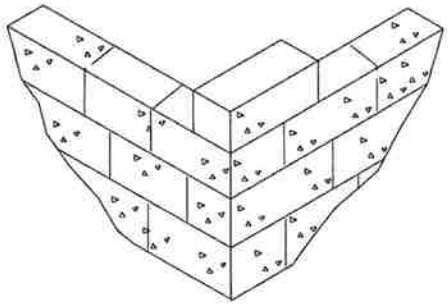

CORNER VIEW

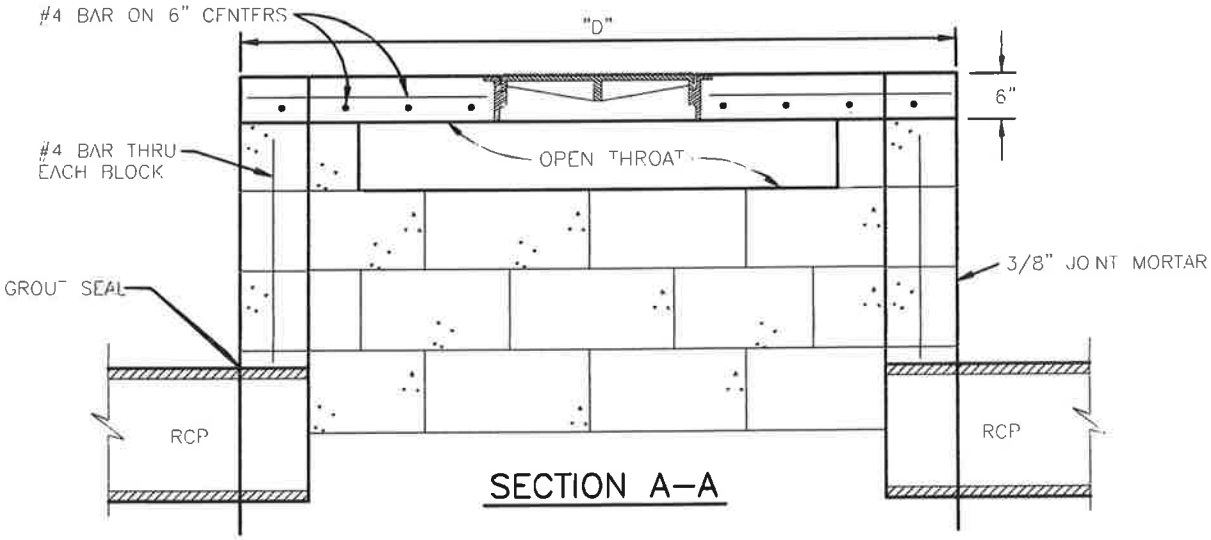

SECTION A–A

A) DROP INLET IS NOT DESIGNED TO BE SUBJECTED TO VEHICULAR TRAFFIC.

B) NUMBER OF SIDES OPEN FOR DRAINAGE DEPENDS UPON FLOW VOLUME REQUIREMENTS.

C) THE FOLLOWING MATERIALS SHALL BE AS SPECIFIED IN FLORIDA D.O.T. SPEC'S., 2000. SEC 346 CONCRETE, SEC 962–8 IRON CASTING, SEC 931–1 REINFORCED STEEL.

D) FILL BLOCKS WITH 3,000 P.S.I. CONCRETE (EACH CELL), USE #4 ROD IN EACH BLOCK, 16" O/C.

E) USE #4 ROD ON 6" CENTERS BOTH WAYS ON LID.

F) SEE SHEET # 202.0 GENERAL NOTES AND DIMENSIONS INDEX, ALSO SHEET 202.1 TYP. CONC. BOX.

G) PRECAST BOXES TO F.D.O.T. SPECIFICATIONS ARE AN ACCEPTABLE ALTERNATE.

H) INVERT TO BE GROUTED (SEE 202.1).

I) PRECAST BOXES AS SPECIFIED IN F.D.O.T. ROADWAY AND TRAFFIC DESIGN STANDARDS ARE AN ACCEPTABLE ALTERNATIVE AS APPROVED BY THE TRANSPORTATION DIRECTOR OR HIS DESIGNEE.

J) ANGLE BRACKETS SHOWN ON 202.1 NOT REQUIRED.

CITY OF HOLMES BEACH PUBLIC WORKS DEPARTMENT			THROAT DETAIL FOR DROP INLET	202.3
REV.BY	DATE			
		DATE OF APPROVAL		

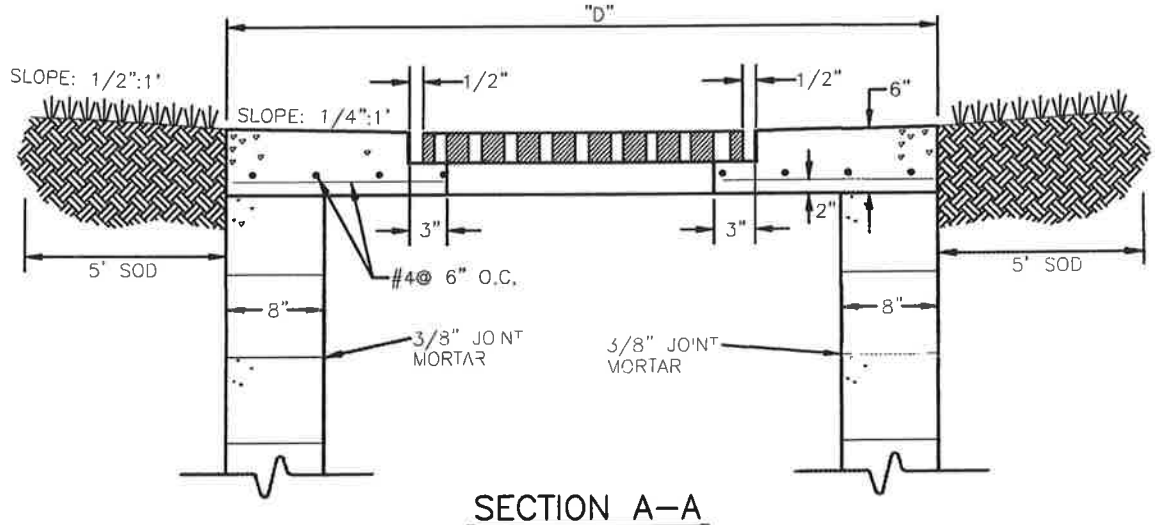

SECTION A–A

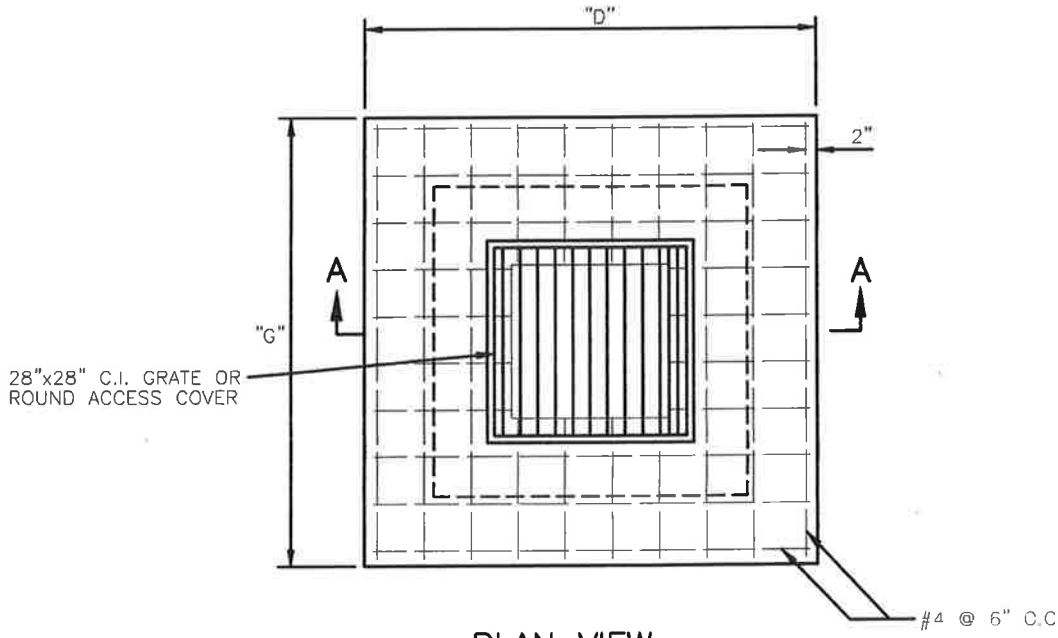

PLAN VIEW

NOTE: DIMENSIONS "D" & "G" PER SECTION 202.0

A) ALTERNATE C.I. GRATES, 18"X 24", 24"X 24", 28"X 36".

B) SOD TO BE PLACED A MINIMUM OF 5' AROUND BOX.

C) THE FOLLOWING MATERIALS SHALL BE AS SPECIFIED IN FLORIDA D.O.T. SPEC'S., 2000. SEC 346 CONCRETE, SEC 962-8 IRON CASTING, SEC 931-1 REINFORCED STEEL.

D) FILL BLOCKS WITH 3,000 P.S.I. CONCRETE (EACH CELL), USE # 4 ROD IN EACH BLOCK, 16" O/C.

E) USE #4 ROD ON 6" CENTERS BOTH WAYS ON LID.

F) SEE SHEET # 202.0 GENERAL NOTES AND DIMENSIONS INDEX, ALSO SHEET 202.1 TYP. CONC. BOX.

G) PRECAST BOXES AS SPECIFIED IN F.D.O.T. ROADWAY AND TRAFFIC DESIGN STANDARDS ARE AN ACCEPTABLE ALTERNATIVE AS APPROVED BY THE TRANSPORTATION DIRECTOR OR HIS DESIGNEE.

H) ANGLE BRACKETS SHOWN ON 202.1 NOT REQUIRED.

CITY OF HOLMES BEACH PUBLIC WORKS DEPARTMENT			NON-TRAFFIC BEARING BOX LID	202.4
REV.BY	DATE			
		DATE OF APPROVAL		

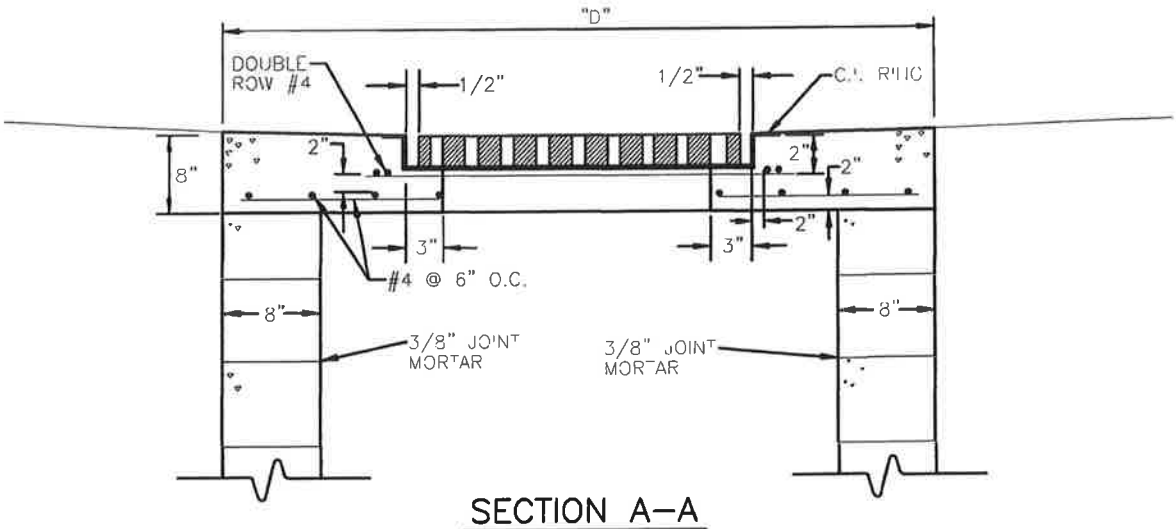

SECTION A–A

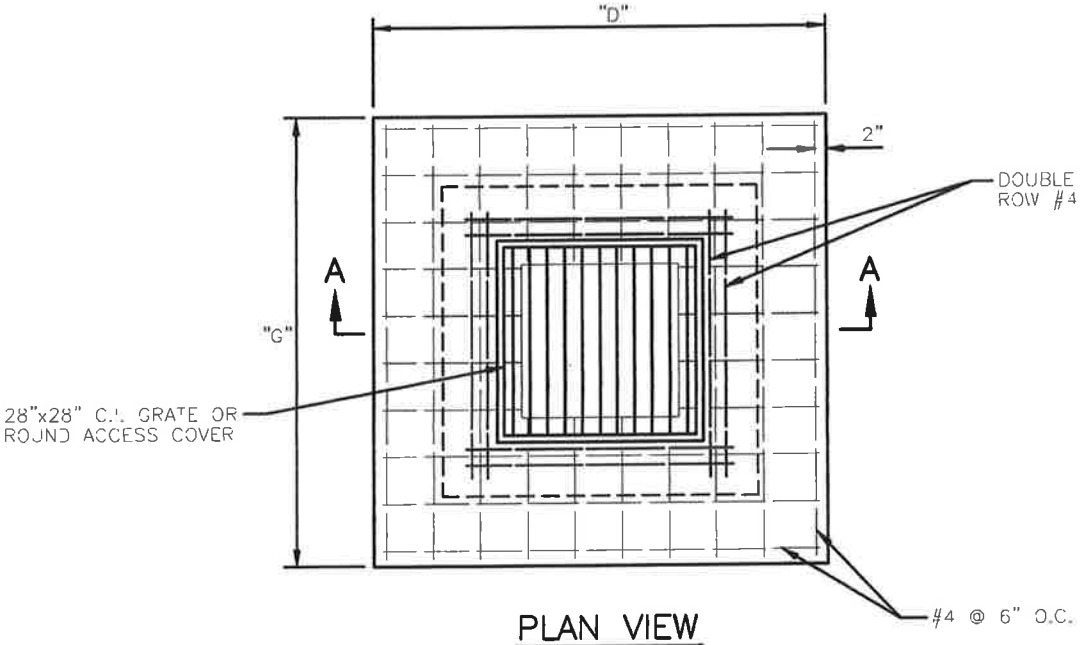

PLAN VIEW

NOTE: DIMENSIONS "D" & "G" PER SECTION 202.0

A) ALTERNATE C.I. GRATES, 18"X 24", 24"X 24", 28"X 36" OR ACCESS COVER (202.6).

B) 8" TRAFFIC BEARING LID W/ REINFORCING C.I. RING & DOUBLE ROW OF #4 REBAR.

C) FOLLOWING MATERIALS ARE SPECIFIED IN FLORIDA D.O.T. SPEC'S., 2000. SEC 346 CONCRETE, SEC 962–8 IRON CASTING, SEC 931–1 REINFORCED STEEL.

D) FILL BLOCKS WITH 3,000 P.S.I. CONCRETE (EACH CELL), USE #4 ROD IN EACH BLOCK, 16" O/C.

E) USE #4 ROD ON 6" CENTERS BOTH WAYS ON LID. (SEE 202.3 E)

F) SEE SHEET # 202.0 GENERAL NOTES AND DIMENSIONS INDEX, ALSO SHEET 202.1 TYP. CONC. BOX.

G) INVERT TO BE GROUTED (SEE 202.1).

H) PRECAST BOXES AS SPECIFIED IN F.D.O.T. ROADWAY AND TRAFFIC DESIGN STANDARDS ARE AN ACCEPTABLE ALTERNATIVE AS APPROVED BY THE TRANSPORTATION DIRECTOR OR HIS DESIGNEE.

I) ANGLE BRACKETS SHOWN ON 202.1 NOT REQUIRED.

CITY OF HOLMES BEACH PUBLIC WORKS DEPARTMENT			TRAFFIC BEARING BOX LID	202.5
REV.BY	DATE			
		DATE OF APPROVAL		

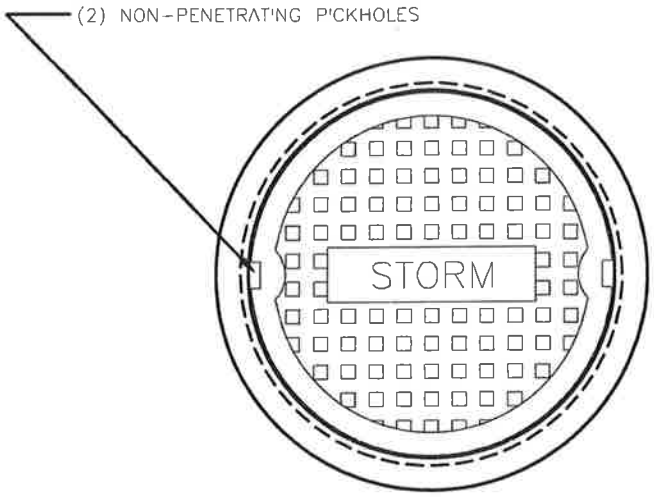

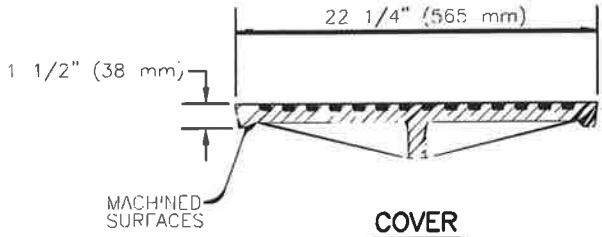

COVER

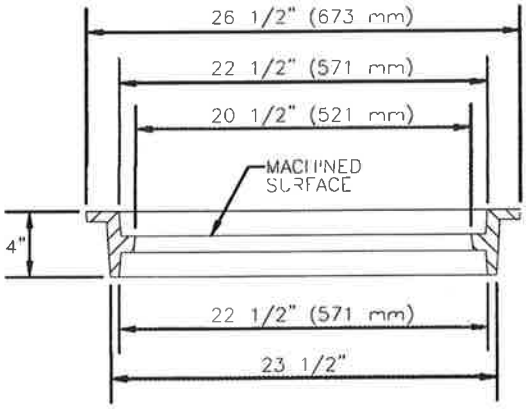

RING

USF 1110 RING & PROPOSED COVER

NOTE:

1 – MATERIAL; ASTM-A48 CLASS 30B GRAY IRON.
2 – COVER WEIGHT: 105 LBS. APPROX.
3 – RING WEIGHT: 90 LBS. APPROX.

CITY OF HOLMES BEACH PUBLIC WORKS DEPARTMENT			ACCESS COVER FOR STORMWATER JUNCTION BOX (PRIVATE)	203.0
REV.BY	DATE			
		DATE OF APPROVAL		

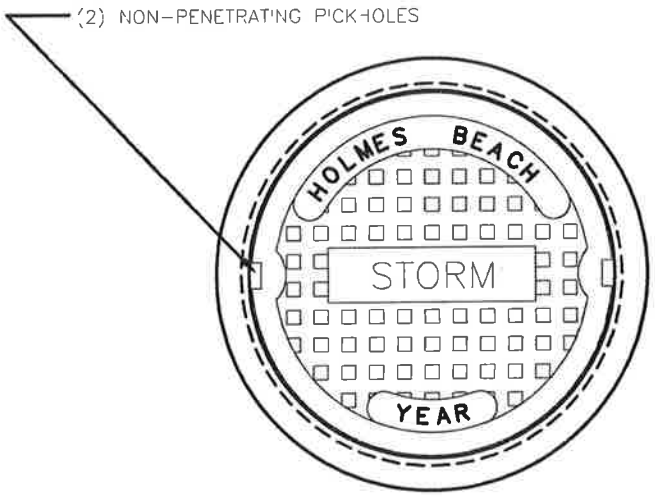

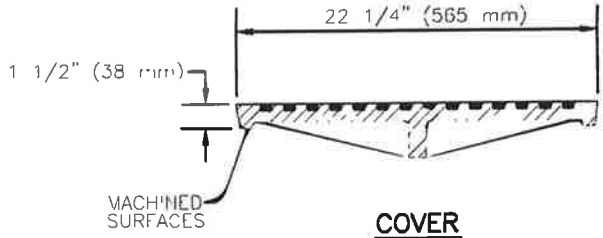

COVER

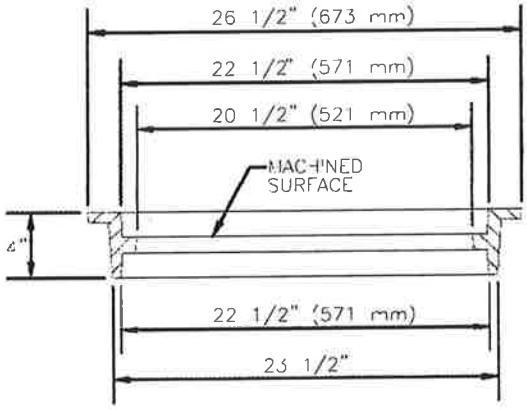

RING

USF 1110 RING & PROPOSED COVER

NOTE:

1 – MATERIAL: ASTM-A48 CLASS 30B GRAY IRON.
2 – COVER WEIGHT: 105 LBS. APPROX.
3 – RING WEIGHT: 90 LBS. APPROX.

CITY OF HOLMES BEACH PUBLIC WORKS DEPARTMENT			ACCESS COVER FOR STORMWATER JUNCTION BOX (PUBLIC)	203.1
REV.BY	DATE			
		DATE OF APPROVAL		

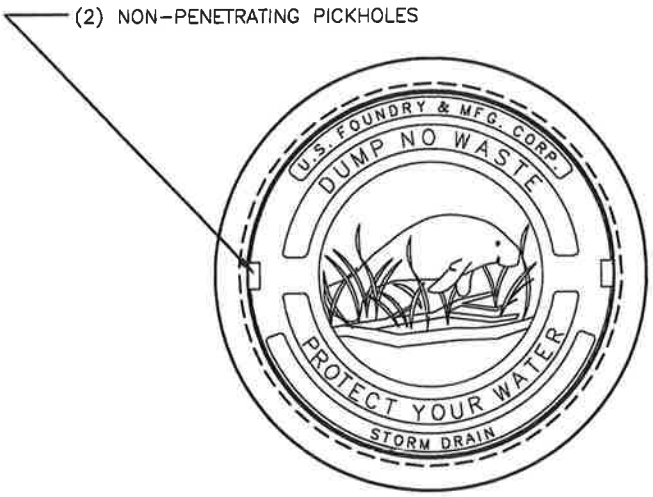

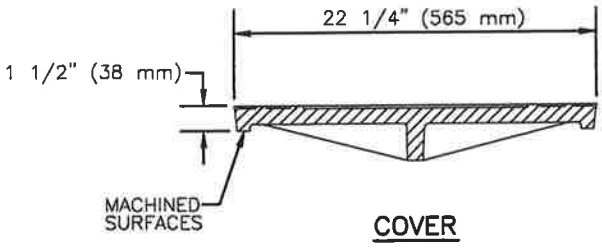

COVER

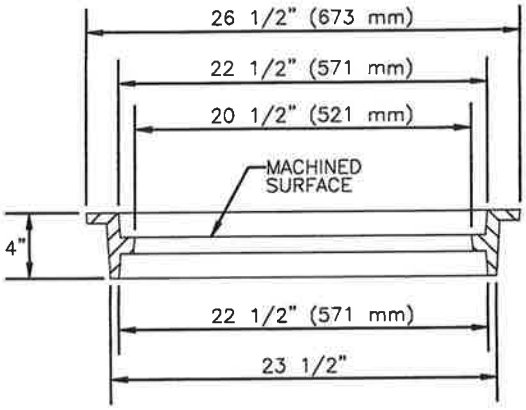

RING

USF 1110 RING & PROPOSED COVER

NOTE:

1 – MATERIAL; ASTM-A48 CLASS 30B GRAY IRON.
2 – COVER WEIGHT: 105 LBS. APPROX.
3 – RING WEIGHT: 90 LBS. APPROX.

CITY OF HOLMES BEACH PUBLIC WORKS DEPARTMENT			ACCESS COVER FOR CATCH BASIN & THROAT INLET (PUBLIC)	203.2
REV.BY	DATE			
		DATE OF APPROVAL		

UNDERDRAIN

1. CORRUGATED POLYETHYLENE TUBING

CORRUGATED POLYETHYLENE TUBING WITH A FILTER FABRIC WRAP, UNLESS OTHERWISE NOTED, MAY BE USED FOR UNDERDRAIN APPLICATIONS ASSOCIATED WITH ROADWAY CONSTRUCTION PROVIDING THE FOLLOWING SPECIFICATIONS ARE MET:

A) THE CORRUGATED POLYETHYLENE TUBING SHALL MEET THE REQUIREMENTS OF ASTM F-405.

B) THE CORRUGATED POLYETHYLENE TUBING SHALL HAVE A FILTER FABRIC SOCK MEETING F.D.O.T. SPEC. 948-3, LATEST REVISION. IF PERFORATIONS IN PIPE ARE LESS THAN 3/4", THEN FILTER FABRIC SOCK MAY BE OMITTED.

C) THE ENVELOPE MATERIAL SURROUNDING THE TUBING SHALL BE CRUSHED STONE OR WASHED SHELL. THE THICKNESS OF THE ENVELOPE MATERIAL SHALL BE EQUAL TO OR GREATER THAN THE DIAMETER OF THE TUBING, PLUS 12".

D) CORRUGATED POLYETHYLENE TUBING SHALL NOT BE ACCEPTABLE UNDER ROADWAYS.

E) EXTRA CARE SHALL BE TAKEN DURING PLACEMENT TO MAINTAIN PROPER LINE AND GRADE, TO BE PLACED W/ SLOPE OF ROAD.

F) A CLEAN-OUT SHALL BE CONSTRUCTED AT THE END OF EACH RUN OF UNDER-DRAIN. MAXIMUM SPACING EVERY 100 FEET.

G) SOD 3' AROUND 18" CONC. SQUARE.

*NOTE: TRANSPORTATION DIRECTOR OR HIS DESIGNEE'S APPROVAL IS REQUIRED FOR THE USE OF FLEXIBLE UNDERDRAIN PIPE.

CITY OF HOLMES BEACH PUBLIC WORKS DEPARTMENT			UNDERDRAIN GENERAL NOTES	204.0
REV.BY	DATE			
		DATE OF APPROVAL		

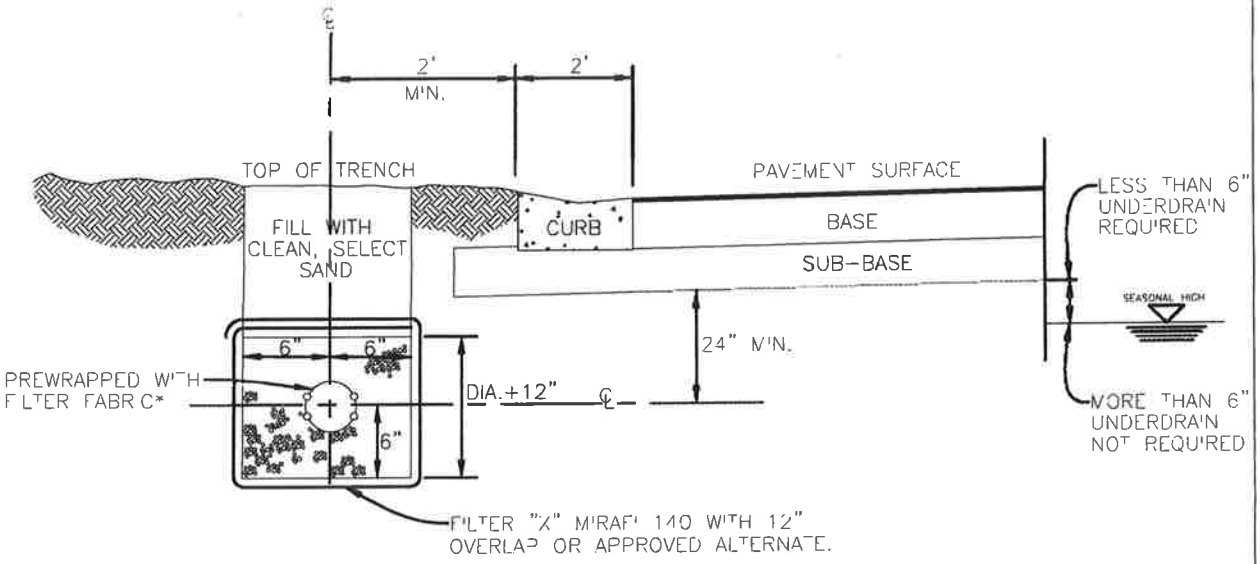

UNDERDRAIN PLACEMENT

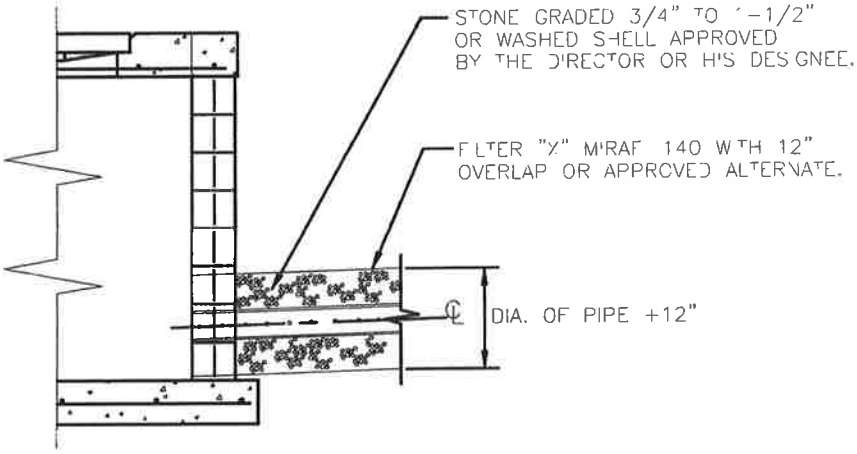

UNDERDRAIN TIE TO INLET

A) LOCATION OR NEED FOR UNDERDRAIN TO BE APPROVED BY THE DIRECTOR OR HIS DESIGNEE.

B) UNDERDRAIN SHALL BE AS SPECIFIED IN SECTION 440 OF FLORIDA DEPT. OF TRANSPORTATION SPEC. (2000 OR LATEST REVISION).

C) 6" TO 8" PERFORATED PIPE AS REQUIRED.

D) BACKFILL WITH CLEAN, SELECT SAND TO LINES SHOWN ON PLANS.

* IF PIPE PERFORATIONS ARE SMALLER THAN 3/4", THEN FILTER FABRIC SOCK MAY OMITTED.

CITY OF HOLMES BEACH PUBLIC WORKS DEPARTMENT			TYPICAL UNDERDRAIN LAYOUT	204.1
REV.BY	DATE			
		DATE OF APPROVAL		

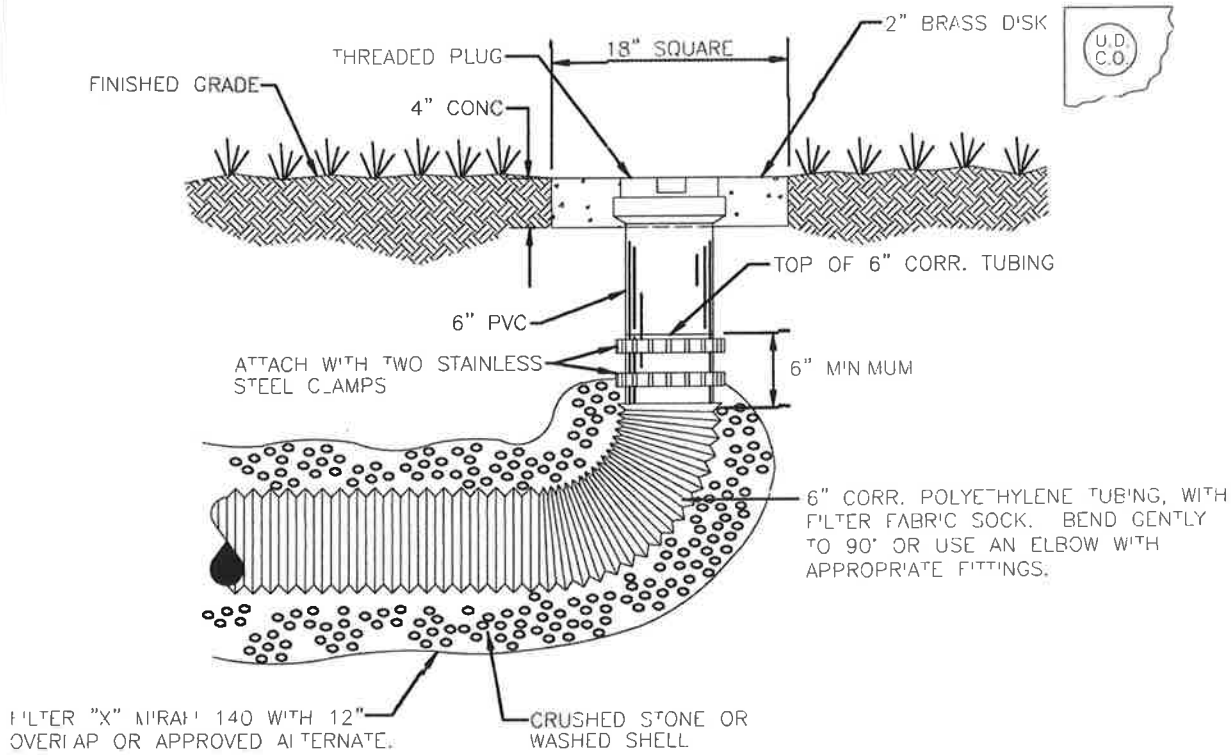

UNDERDRAIN CLEAN-OUT DETAIL
CORRUGATED POLYETHYLENE TUBING

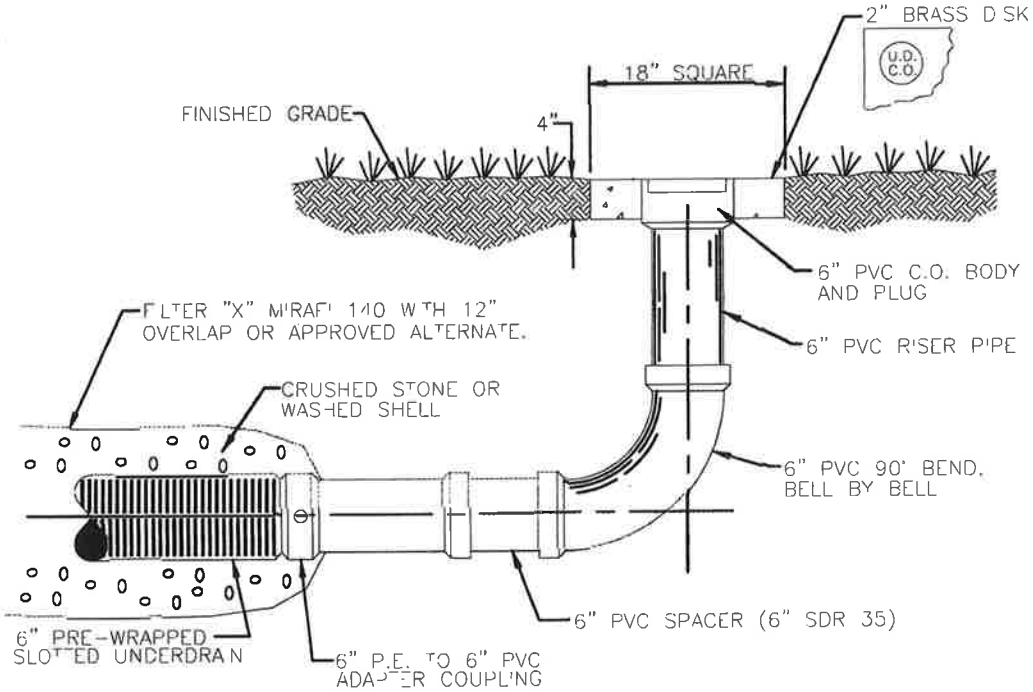

UNDERDRAIN CLEAN-OUT DETAIL – RIGID

* MAXIMUM SPACING EVERY 100 FEET.

CITY OF HOLMES BEACH PUBLIC WORKS DEPARTMENT			UNDERDRAIN CLEAN-OUTS (FLEXIBLE & RIGID)	204.2
REV. BY	DATE			
		DATE OF APPROVAL		

METAL STORM SEWER PIPE, GENERAL NOTES

A. SHALL MEET REQUIREMENTS OF SECTION 430 AND 943 OF THE F.D.O.T.'s LATEST REVISION/UPDATE SPECIFICATIONS FOR ROAD AND BRIDGE CONSTRUCTION AND ITS SUPPLEMENT. ALL PIPE SHALL BE TYPE 'A', FULLY BITUMINOUS COATED.

B. SHALL HAVE GASKETED WATER TIGHT JOINTS AT ALL LOCATIONS.

C. SHALL HAVE THE PROJECT SITE TESTED BY A CERTIFIED LAB FOR pH, RESISTIVITY, SULFATES AND CHLORIDES. TESTS SHALL BE IN ACCORDANCE WITH FLORIDA METHOD OF TEST FM 5-550, 551, 552 & 553 AND SUBMITTED TO THE TRANSPORTATION DEPARTMENT FOR REVIEW.

D. SHALL HAVE A MINIMUM COVER OF 18".

E. SHALL NOT BE ALLOWED WITHIN THE ROAD RIGHT-OF-WAY OR CARRY RIGHT-OF-WAY RUNOFF.

F. ALL STORMWATER PIPE SHALL BE INSTALLED BEHIND THE CURB OR EDGE OF PAVEMENT AND WITHIN THE RIGHT OF WAY.

HDPE STORM SEWER PIPE GENERAL NOTES

A. HDPE SHALL MEET CURRENT F.D.O.T. STANDARD SPECIFICATIONS.

B. MINIMUM COVER – 9" (TOP OF PIPE TO BOTTOM OF RIDGED PAVEMENT OF DRIVEWAY)
– 15" (TOP OF PIPE TO BOTTOM OF FLEXIBLE BASE OF DRIVEWAY)

C. SIZES ARE LIMITED TO CURRENT F.D.O.T. STANDARD SPECIFICATIONS UNLESS OTHERWISE APPROVED BY CITY ENGINEER OR SUPERINTENDENT OF PUBLIC WORKS.

D. HDPE PIPE IS NOT ALLOWED UNDER ROADWAY. UNLESS OTHERWISE APPROVED BY CITY ENGINEER OR SUPERINTENDENT OF PUBLIC WORKS.

FIBER OR WIRED REINFORCED CONC. PIPE, GENERAL NOTES

A. FRCP SHALL MEET CURRENT F.D.O.T. STANDARD SPECIFICATIONS. UNLESS OTHERWISE APPROVED BY CITY ENGINEER OR SUPERINTENDENT OF PUBLIC WORKS.

B. SIZES LIMITED TO F.D.O.T. CURRENT STANDARD SPECIFICATIONS.

CITY OF HOLMES BEACH PUBLIC WORKS DEPARTMENT			STORM SEWER PIPE GENERAL NOTES	205.0
REV.BY	DATE			
		DATE OF APPROVAL		

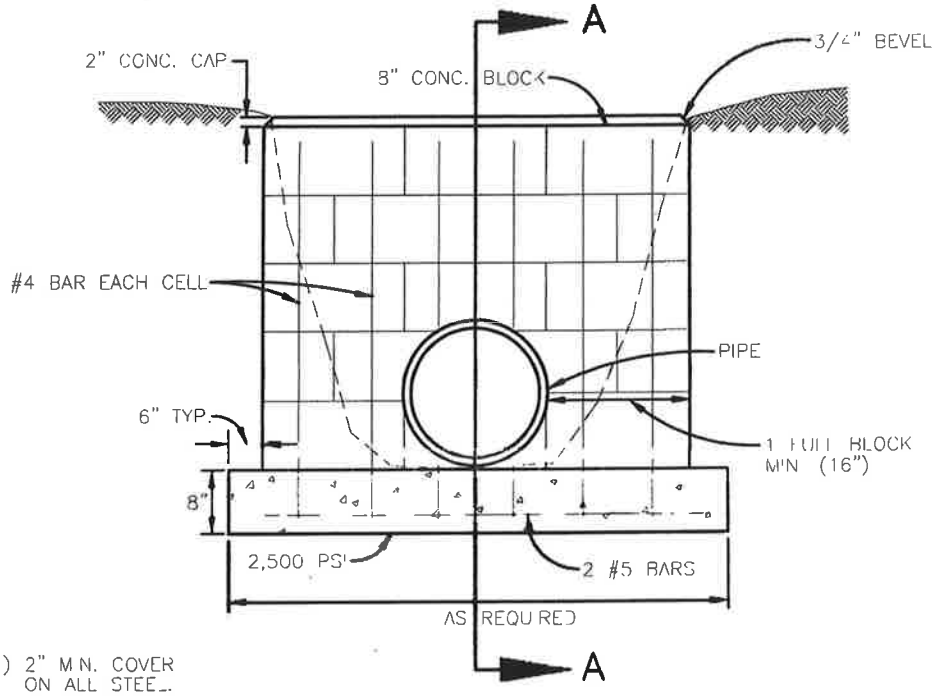

NOTE; 1) 2" MIN. COVER ON ALL STEEL.
2) EACH CELL OF BLOCK TO BE POURED

END VIEW

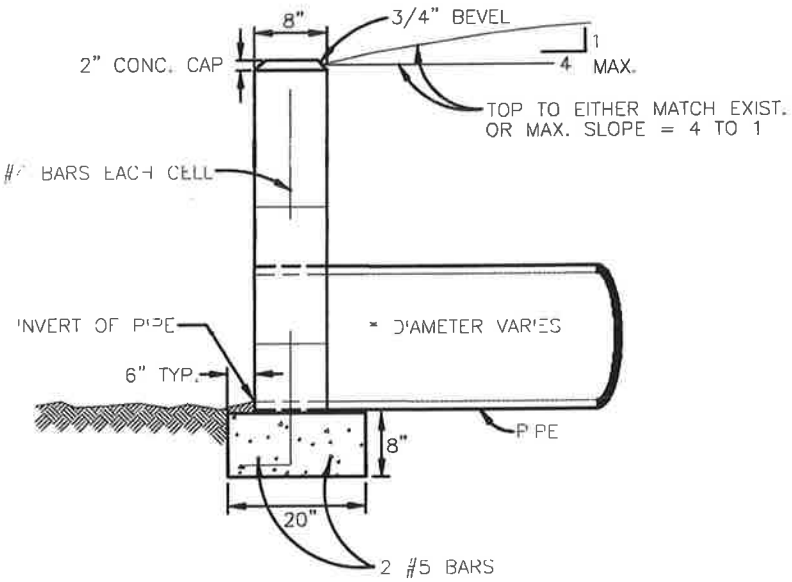

SECTION A–A

CITY OF HOLMES BEACH PUBLIC WORKS DEPARTMENT			CONCRETE BLOCK HEADWALL	205.1
REV.BY	DATE			
		DATE OF APPROVAL		

SIDEWALKS INDEX

	SHEET NO.
300 SIDEWALKS	300.0
A. GENERAL NOTES	301.0
SIDEWALK REQUIREMENTS	301.1
HANDICAPPED RAMP SHEET #1	302.1
HANDICAPPED RAMP SHEET #2	302.2
CURB RAMP DETECTABLE WARNINGS	302.3

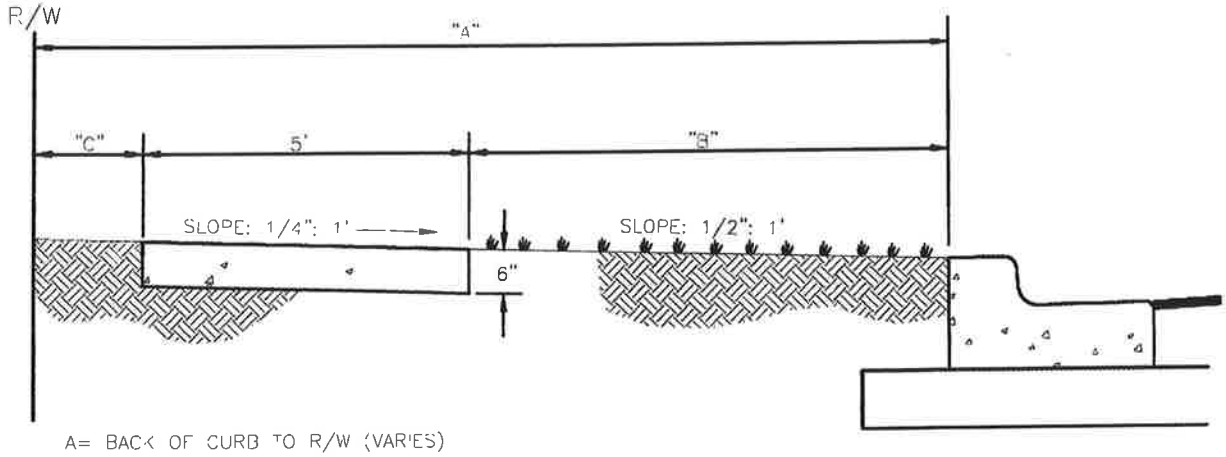

A= BACK OF CURB TO R/W (VARIES)

B= UNPAVED AREA (VARIES) REFER TO F.D.O.T. GREEN BOOK, TABLE 3-12, LATEST REVISION.

C= VARIES, SEE 40' SERIES

TYPICAL SIDEWALK LOCATION

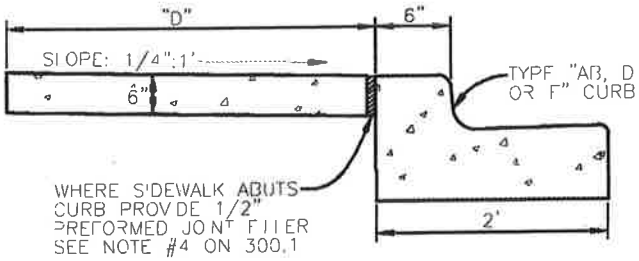

D= SIDEWALK WIDTH SHALL BE 6' STANDARD, WHERE WALK ABUTS TYPE "AB, D OR F" CURB. WHERE SPEED LIMIT IS 25 MPH OR LESS, WIDTH CAN BE 5'-6".

* SEE SHEET 300.1 "GENERAL NOTES" FOR FURTHER INFORMATION

ALTERNATE SIDEWALK LOCATION

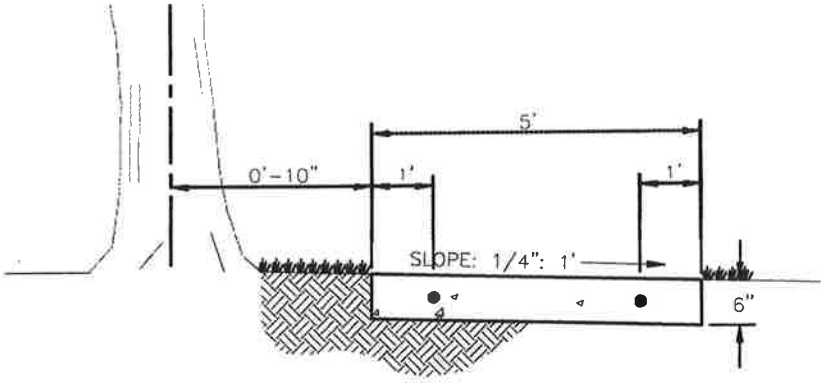

SIDEWALK LOCATION CLOSE TO TREES

CITY OF HOLMES BEACH PUBLIC WORKS DEPARTMENT			SIDEWALK REQUIREMENTS	301.1
REV.BY	DATE			
		DATE OF APPROVAL		

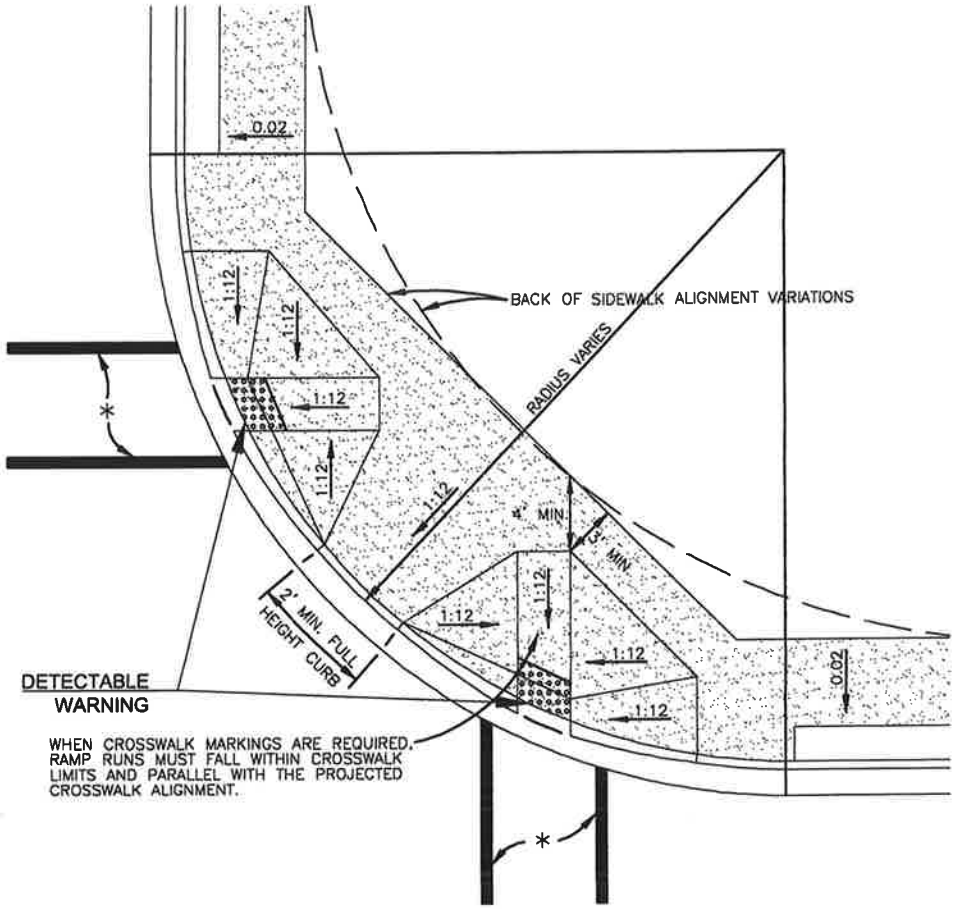

* CROSSWALK WIDTHS AND CONFIGURATION VARY; MUST CONFORM TO FDOT INDEX NO. 17344 AND 17346.

1) CURB CUT RAMPS ARE TO BE LOCATED AS SHOWN ON PLANS.

2) SEE SHEETS # 300.1 "GENERAL NOTES" & # 301.2 "HANDICAPPED RAMP" SHT 2 FOR FURTHER REQUIREMENTS.

3) RADIUS OF CURB VARIES AS FOLLOWS:

   A) 25' RAD. LOCAL STREET WITH ALLEY.
   B) 25' RAD. LOCAL STREET WITH LOCAL STREET.
   C) 35' RAD. LOCAL STREET WITH THOROUGHFARE OR COLLECTOR.
   D) 50' RAD. THOROUGHFARE WITH THOROUGHFARE

4) CURB RADIUS SHOULD BE A MINIMUM OF 50' WHERE INDUSTRIAL AND BUS TRAFFIC (5% OR MORE) IS ANTICIPATED ON LOWER CLASSIFICATION ROADWAYS.

5) BOTH LOCATION OPTIONS FOR HANDICAPPED RAMP ARE SHOWN. ENGINEER MAY SELECT EITHER, WHICHEVER FITS THE SITUATION.

NOTE: FOR COMPLETE HANDICAP, PUBLIC SIDEWALK AND CURB RAMP DETAILS, SEE F.D.O.T. DESIGN STANDARDS, 2006 EDITION, INDEX 304, SHEETS 1 THROUGH 6.

CITY OF HOLMES BEACH PUBLIC WORKS DEPARTMENT			HANDICAPPED RAMP SHEET 1	302.1
REV.BY	DATE			
		DATE OF APPROVAL		

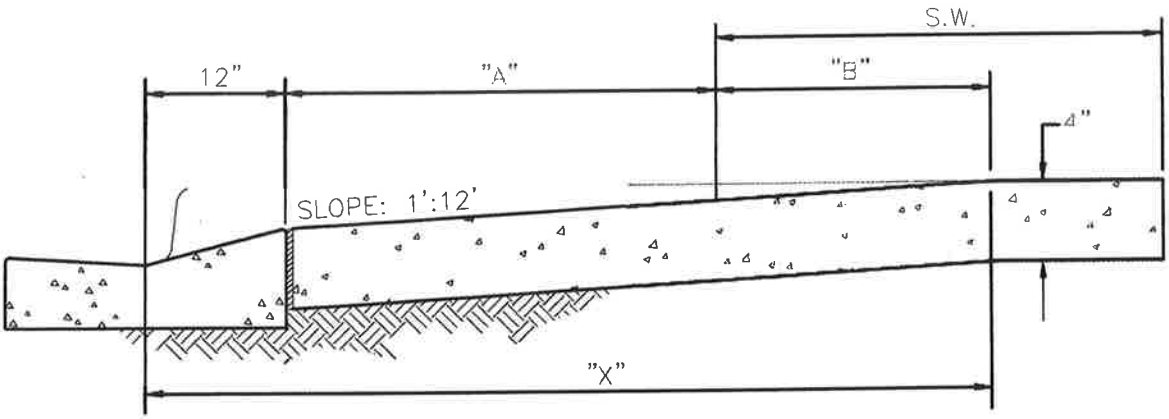

SECTION A–A

(SEE SHEET 301.0)

S.W. = SIDEWALK	"A"	S.W. + A + 10"	"X"	"B"
5'	0	5.8'	5.8'	5'
6'	0	6.8'	6.8'	6'
7'	0	7.8'	7.3'	6.5'
8'	0	8.8'	7.3'	6.5'
5'	2'	7.8'	7.8'	5'
5'	2.5'	8.3'	8.1'	4.8'
5'	3'	8.8'	8.2'	4.4'
5'	3.5'	9.3'	8.4'	4.1'
5'	4'	9.8'	8.6'	3.8'
5'	4.5'	10.3'	8.7'	3.4'
5'	5'	10.8'	9.1'	3.1'

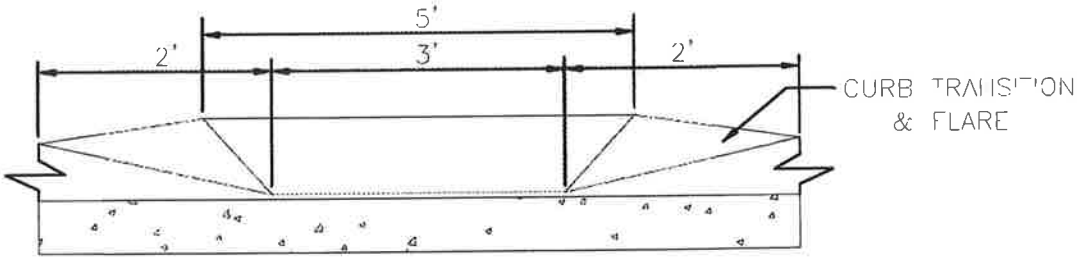

SECTION B–B

(SEE SHEET 301.0)

NOTE: FOR COMPLETE HANDICAP, PUBLIC SIDEWALK AND CURB RAMP DETAILS, SEE F.D.O.T. DESIGN STANDARDS, 2006 EDITION, INDEX 304, SHEETS 1 THROUGH 6.

CITY OF HOLMES BEACH PUBLIC WORKS DEPARTMENT			HANDICAPPED RAMP SHEET 2	302.2
REV. BY	DATE			
		DATE OF APPROVAL		

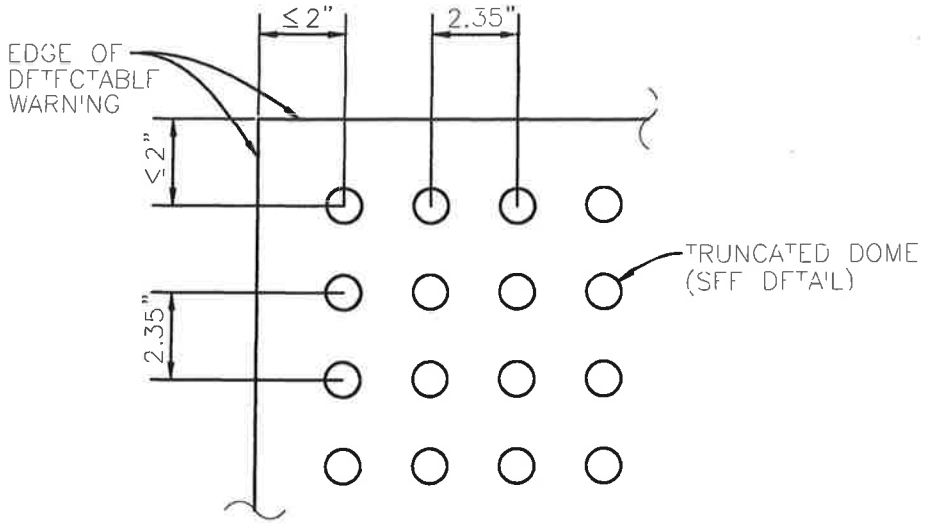

PLAN VIEW

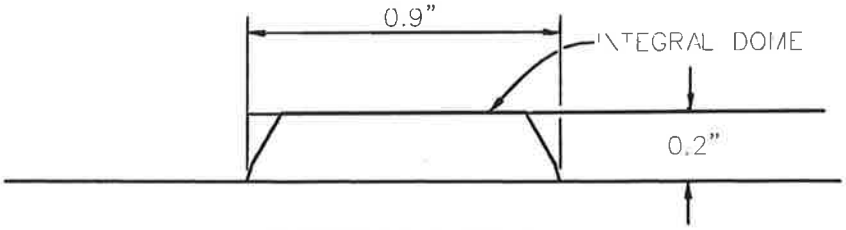

TRUNCATED DOME

CURB RAMP DETECTABLE WARNING DETAIL

NOTES:

DETECTABLE WARNINGS ON WALKING SURFACES

THE DETECTABLE WARNING SHALL EXTEND THE FULL WIDTH AND DEPTH OF THE CURB RAMP.

DETECTABLE WARNINGS SHALL CONSIST OF RAISED TRUNCATED DOMES WITH A DIAMETER OF NOMINAL 0.9 INCH, A HEIGHT OF NOMINAL 0.2 INCH AND A CENTER-TO-CENTER SPACING OF NOMINAL 2.35 INCH AND SHALL CONTRAST VISUALLY WITH ADJOINING SURFACES, EITHER LIGHT-ON-DARK, OR DARK-ON-LIGHT.

THE MATERIAL USED TO PROVIDE CONTRAST SHALL BE AN INTEGRAL PART OF THE WALKING SURFACE. DETECTABLE WARNINGS USED ON INTERIOR SURFACES SHALL DIFFER FROM ADJOINING WALKING SURFACES IN RESILIENCY OR SOUND-ON-CANE CONTACT.

THE MATERIAL USED TO PROVIDE CONTRAST SHOULD CONTRAST BY AT LEAST 70%. CONTRAST IN PERCENT IS DETERMINED BY:

$$\text{CONTRAST} = [(B1-B2)/B1] \times 100$$

WHERE B1 = LIGHT REFLECTANCE VALUE (LRV) OF THE LIGHTER AREA AND B2 = LIGHT REFLECTANCE VALUE (LRV) OF THE DARKER AREA.

NOTE THAT IN ANY APPLICATION BOTH WHITE AND BLACK ARE NEVER ABSOLUTE; THUS, B1 NEVER EQUALS 100 AND B2 IS ALWAYS GREATER THAN 0.

CITY OF HOLMES BEACH PUBLIC WORKS DEPARTMENT			CURB RAMP DETECTABLE WARNINGS	302.3
REV. BY	DATE			
		DATE OF APPROVAL		

ROAD STANDARD INDEX

		SHEET NO.
400	ROAD STANDARDS	400.0
A.	GENERAL NOTES	400.1 & 400.2
1.	RESERVED	401.0
2.	RESERVED	401.1
3.	RESERVED	401.2
4.	RESERVED	401.3
5.	RESERVED	401.4
6.	RESERVED	401.5
7.	RESERVED	401.6
8.	TYPICAL LOCAL RESIDENTIAL SWALE CROSSING	401.7
9.	TYPICAL LOCAL RESIDENTIAL CURB CROSSING	401.8
10.	TYPICAL LOCAL SHELL ROAD	401.9
11.	RESERVED	401.10
12.	RESERVED	401.11
13.	MINIMUM CURB RADIUS	402.0
14.	MINIMUM CLEAR ZONE WIDTHS	402.1
15.	MEDIAN REQUIREMENTS	402.2
16.	LOCAL TO THOROUGHFARE INTERSECTION SEPARATION REQUIREMENTS	402.3
17.	RESERVED	402.4
18.	DRIVEWAY SETBACK DISTANCE	402.5
B.	SOIL CEMENT SPECIFICATIONS	403.0
C.	CEMENT TREATED BASE	403.1
D.	UTILITY ROAD CUT REPLACEMENT	403.2
E.	ROAD CONNECTION DETAIL	403.3
G.	TYPICAL RESIDENTIAL STREET ROUNDABOUT	404.0
H.	SPEED TABLE DETAIL	405.0

CITY OF HOLMES BEACH
PUBLIC WORKS DEPARTMENT

REV.BY	DATE

DATE OF APPROVAL

ROAD STANDARDS INDEX

400.0

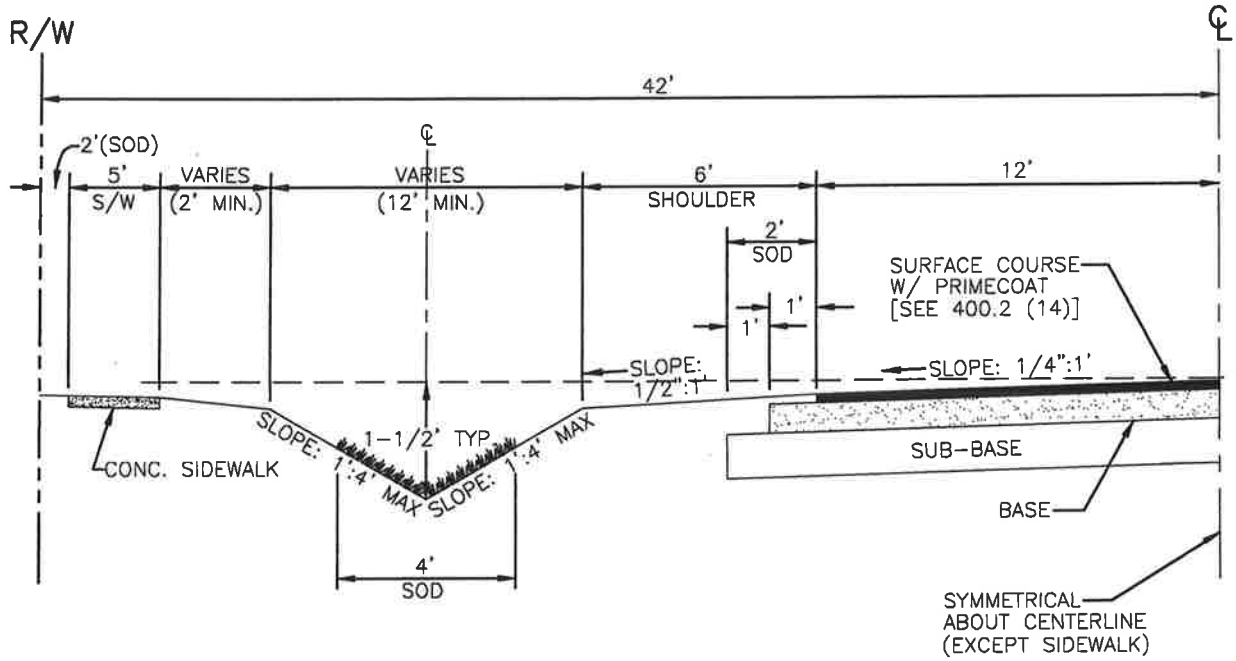

NOTES:

A) Asphaltic concrete surface course 1-3/4" minimum thickness (Type S). Two lifts of asphalt shall be considered acceptable, however a performance bond shall be required if second lift is delayed. The first lift shall be 1" of S-I, the second lift shall be 3/4" of S-III.

B) Base Course shall consist of 4-1/2" compacted sand asphalt (1200 lbs. stabilized), 6" base course 600 lbs. per square yard limrock compacted to 98% AASHTO T-180 density, or 6" soil cement* (6" Caloosahatchee Shell LBR 100).

C) 6" stabilized sub-base shell marl blended with sandy sub-base minimum LBR 40, 98% T180 AASHTO.

D) Shoulder, slopes and ditch bottom to have a minimum of 2" topsoil, bottom 4' of area to be sodded, and the balance is to be seeded and mulched per section 400.1 (8)

E) The slope of contiguous property may not exceed 1' to 4'.

F) 12" cover on storm sewers, no portion of pipe to be into sub-base.

G) Laboratory tests are required to substantiate structural section design. Specifications shown on this sheet are minimum.

* Or approved equal, meeting same structural number.

CITY OF HOLMES BEACH PUBLIC WORKS DEPARTMENT			LOCAL RESIDENTIAL SWALE CROSSING	401.7
REV.BY	DATE			
		DATE OF APPROVAL		

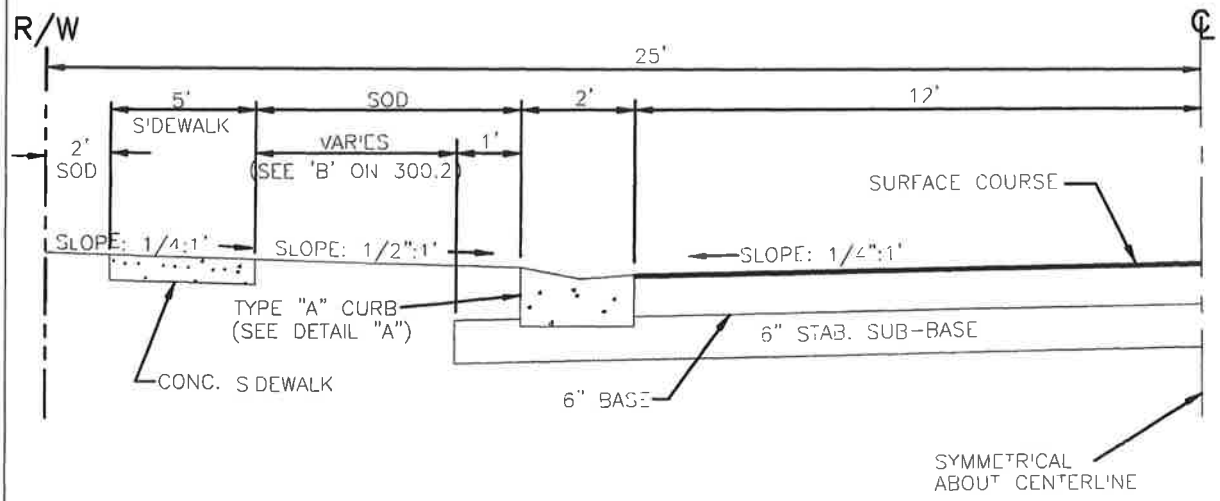

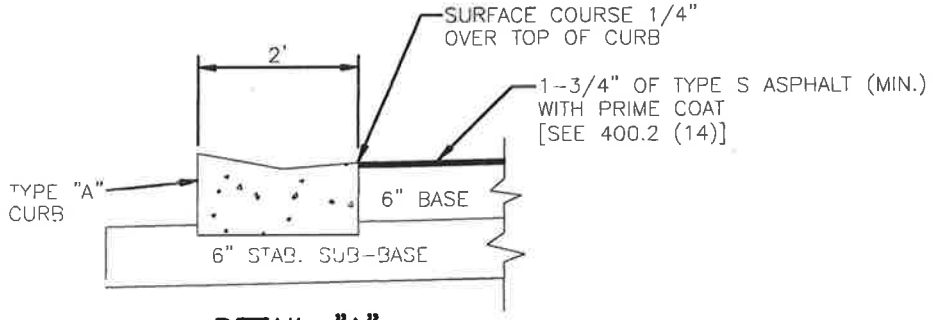

DETAIL "A"

NOTES:

A) Asphaltic concrete surface course shall be layed in two lifts. The first lift shall be 1" Type S-I or S-II. The second lift shall be 3/4" Type S-III. A performance bond shall be required if the second lift is delayed beyond acceptance of the road.

B) Base course shall consist of 4-1/2" compacted sand asphalt base (1200 lbs. stab.) or 6" Caloosahatchee shell compacted to 98% AASHTO T-180 density LBR 100 or 6" soil cement.*

C) 6" stabilized sub-base shall marl blended with sandy sub-grade minimum LBR 40, 98% T180 AASHTO.

D) On new construction, sanitary sewer may be placed on centerline of R/W if desired. All laterals to be installed at the same time as sanitary sewer main line.

E) See section 201.0 for curb and gutter types.

F) No portion of drainage pipe shall be allowed in sub-base. 12"minimum cover is required on storm drain.

G) Sidewalk shall be 1'or 2' inside R/W line, with 2' preferable. To be constructed per section 300.1

H) Laboratory tests are required to substantiate structural section design. Specifications shown on this sheet are minimum requirements.

I) If sidewalks are not required, only 2' of sod is required back of curb. Hydromulch balance of right-of-way.

J) Sodding shall be installed per section 400.1 (8)

* Or approved equal, meeting same structural number.

CITY OF HOLMES BEACH PUBLIC WORKS DEPARTMENT			LOCAL RESIDENTIAL CURB CROSSING	401.8
REVISION	DATE			
		DATE OF APPROVAL		

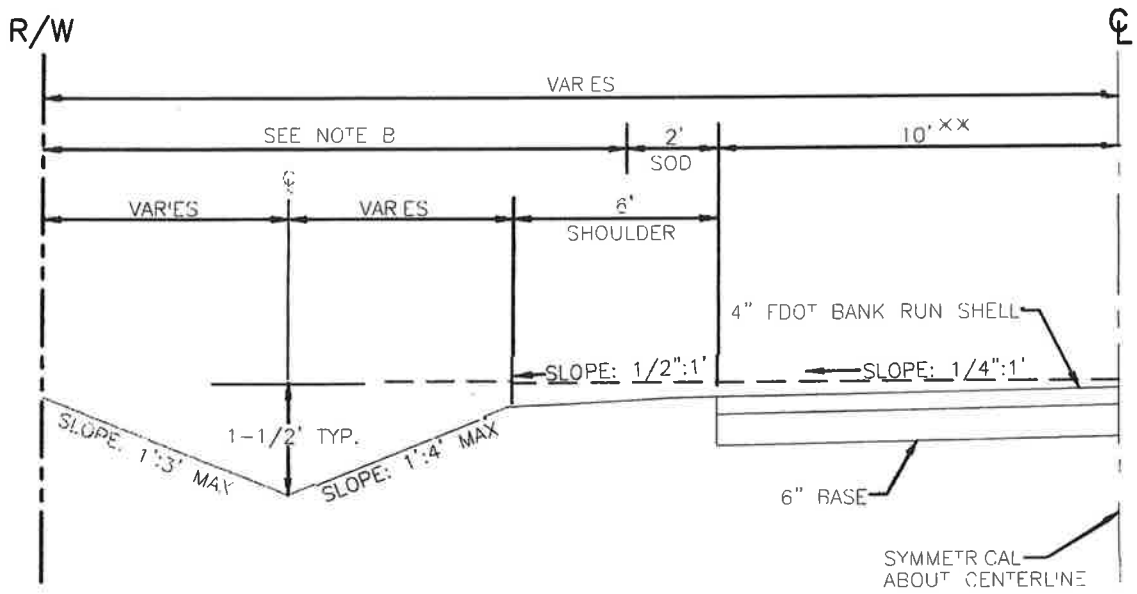

Note: These roads may only be approved for use in Ag-rural designated areas on rights-of-way dedicated prior to Oct. 15, 1990.
Roads will be classified as "Emergency Maintained Only."
Local residents are required to perform routine maintenance.

NOTES:

*A) Clean, stabilized 6" base. Minimum LBR 40, 98% T180 AASHTO. This requires raking and removal of plant material before compaction, if plant material exists within the right of way.

B) Road shall be finished with 4" FDOT bank run shell, then leveled and compacted.

C) Side 2' of road shoulder shall be sodded and if there is no substantial existing grass, remaining shoulder, slopes and ditch bottom shall have a minimum of 2" topsoil, and shall be seeded and mulched. Areas susceptable to erosion must be sodded.

D) The slope of contiguous property may not exceed 3' to 1'

E) 12" cover on storm sewers, no portion of pipe allowed in base.

F) Laboratory tests are required to substantiate structural section design.
Specifications shown on this sheet are minimum requirements.

* Or approved equal.

** Road may be 12' in width, (6' half width) on non-through roads (Dead Ends) serving 4 or fewer lots. Shoulders shall be a minimum of 6' in width and constructed of a stabilized or compacted soil with a minimum LBR OF 40.
The Transportation Director may allow variance to the road standards for certain circumstances.

** Road may be 16' in width (8' half width) on non-through roads (Dead Ends) serving 5 to 8 lots.

CITY OF HOLMES BEACH PUBLIC WORKS DEPARTMENT			LOCAL SHELL ROAD	401.9
REV.BY	DATE			
		DATE OF APPROVAL		

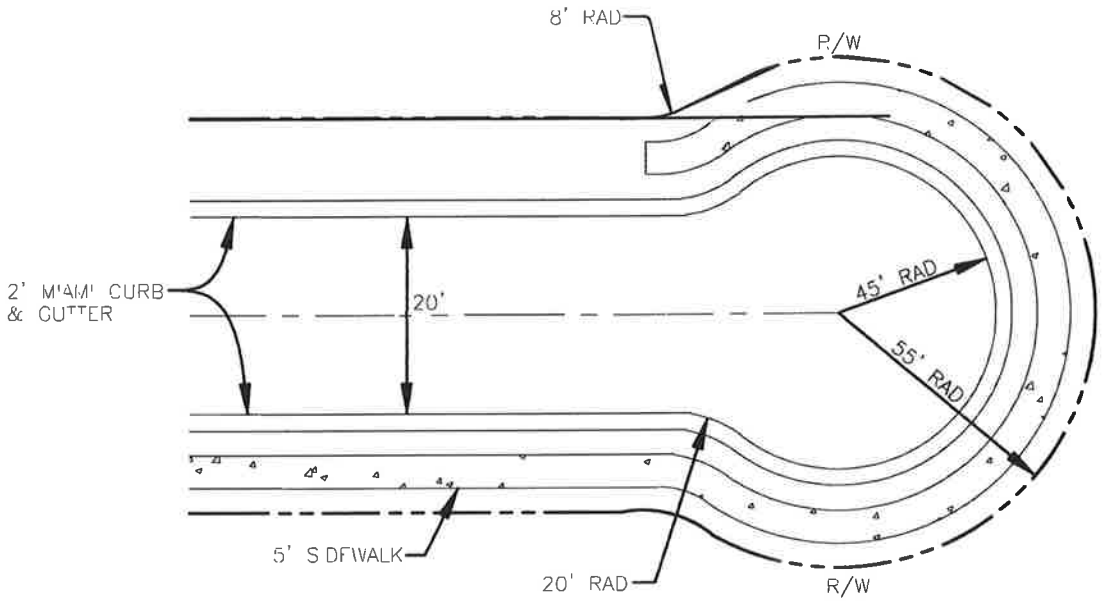

RESIDENTIAL CUL-DE-SAC

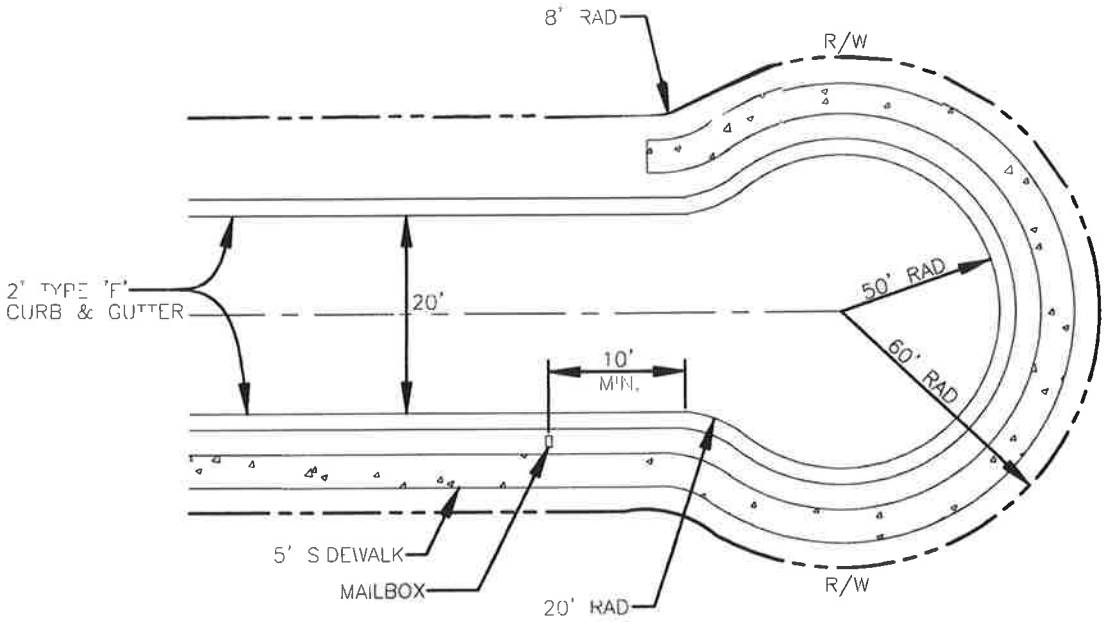

INDUSTRIAL CUL-DE-SAC

CITY OF HOLMES BEACH PUBLIC WORK DEPARTMENT			RESIDENTIAL AND INDUSTRIAL CUL-DE-SAC	401.10
REV.BY	DATE			
		DATE OF APPROVAL		

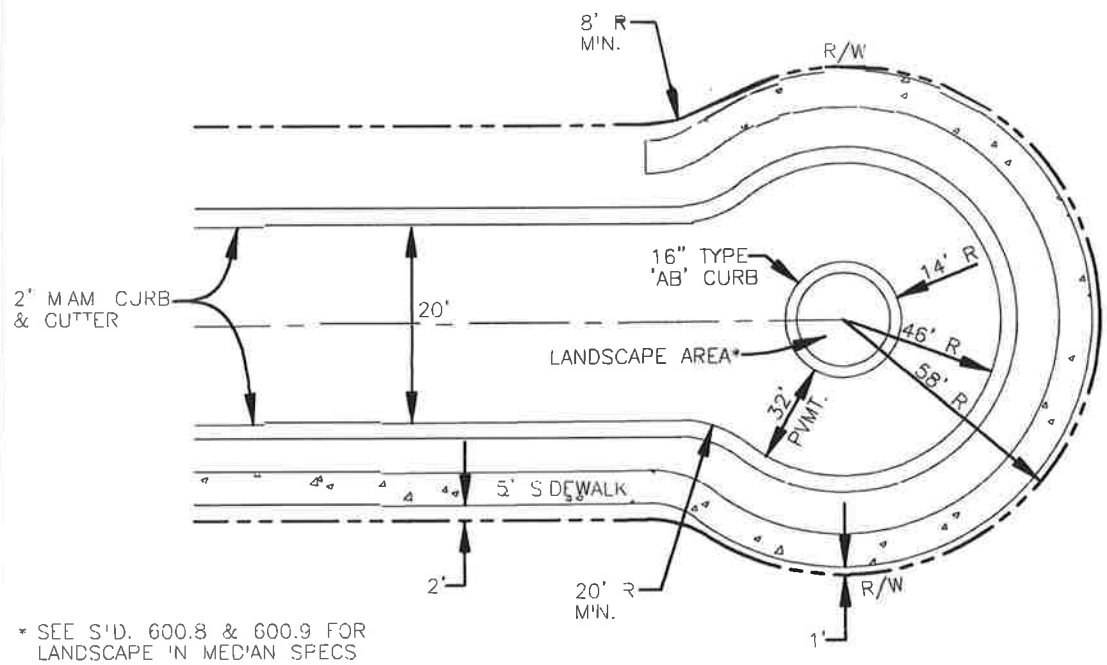

RESIDENTIAL CUL-DE-SAC

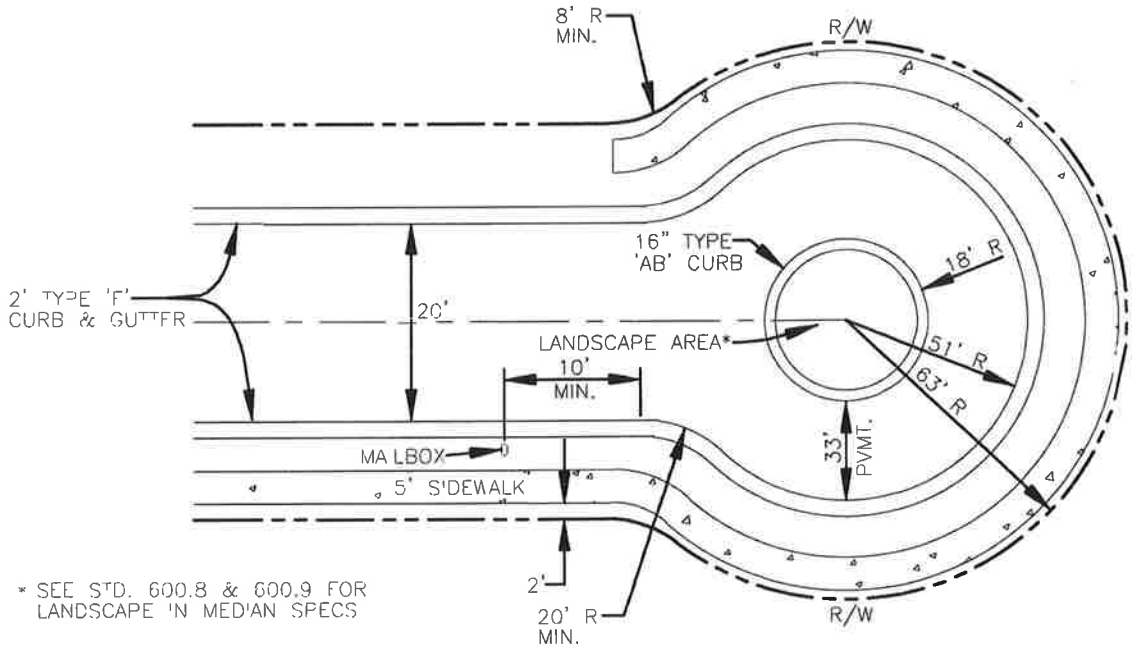

INDUSTRIAL CUL-DE-SAC

ALTERNATE:

TRUCK COLLAR DESIGN MAY BE USED BETWEEN RADIUS OF 16-1/2' AND 30' (SEE 404.2).

CITY OF HOLMES BEACH PUBLIC WORKS DEPARTMENT			RESIDENTIAL AND INDUSTRIAL CUL-DE-SAC WITH MEDIAN	401.11
REV.BY	DATE			
		DATE OF APPROVAL		

MINIMUM FACE OF CURB RADIUS FOR INTERSECTING ROADS

ROAD CLASSIFICATION

ROAD CLASSIFICATION	LOCAL RESIDENTIAL (URBAN & RURAL)	INDUSTRIAL (URBAN & RURAL)	MINOR COLLECTOR	MAJOR COLLECTOR	ARTERIAL
LOCAL RESIDENTIAL (URBAN & RURAL)	25'	40'	35'	35'	35'
INDUSTRIAL (URBAN & RURAL)	40'	50'	50'	50'	50'
MINOR COLLECTOR	35'	50'	50'	50'	50'
MAJOR COLLECTOR	35'	50'	50'	50'	50'
ARTERIAL	35'*	50'	50'	50'	50'

INCREASE PER MPO FREIGHT MANAGEMENT STUDY

* WITHOUT TURN LANE = 50'

CITY OF HOLMES BEACH

PUBLIC WORKS DEPARTMENT

REV. BY	DATE

DATE OF APPROVAL

MINIMUM CURB RADIUS

402.0

MINIMUM WIDTH OF CLEAR ZONE

TYPE OF FACILITY	DESIGN SPEED (MPH)							
	25 AND BELOW	30	35	40	45	50	55	60 AND ABOVE
	MINIMUM CLEAR ZONE (FEET)							
RURAL •	6	6 LOCAL 10 COLLECTORS 14 ARTERIALS	6 LOCAL 10 COLLECTORS 14 ARTERIALS	10 COLLECTORS 14 ARTERIALS	14 ARTERIALS AND COLLECTORS ADT < 1500 18 ARTERIALS AND COLLECTORS ADT ≥ 1500	14 ARTERIALS AND COLLECTORS ADT < 1500 18 ARTERIALS AND COLLECTORS ADT ≥ 1500	18 ARTERIALS AND COLLECTORS ADT < 1500 24 ARTERIALS AND COLLECTORS ADT ≥ 1500	18 ARTERIALS AND COLLECTORS ADT < 1500 30 ARTERIALS AND COLLECTORS ADT ≥ 1500
URBAN *	$1\frac{1}{2}$	4 **	4 **	4 **	4 **	N/A ••	N/A ••	N/A ••

* FROM FACE OF CURB.

** ON PROJECTS WHERE THE 4' MINIMUM OFFSET CANNOT BE REASONABLY OBTAINED AND OTHER ALTERNATIVES ARE DEEMED IMPRACTICAL, THE MINIMUM MAY BE REDUCED TO 1-1/2'.

• USE RURAL FOR URBAN FACILITIES WHEN NO CURB AND GUTTER IS PRESENT. MEASURED FROM THE EDGE OF THROUGH TRAVEL LANE ON RURAL SECTION.

•• CURB AND GUTTER NOT TO BE USED ON FACILITIES WITH DESIGN SPEED > 45 MPH.

NOTE: ADT IN TABLE REFERS TO DESIGN YEAR ADT.

CITY OF HOLMES BEACH
PUBLIC WORKS DEPARTMENT

REV.BY | DATE

DATE OF APPROVAL

MINIMUM CLEAR ZONE WIDTHS

402.1

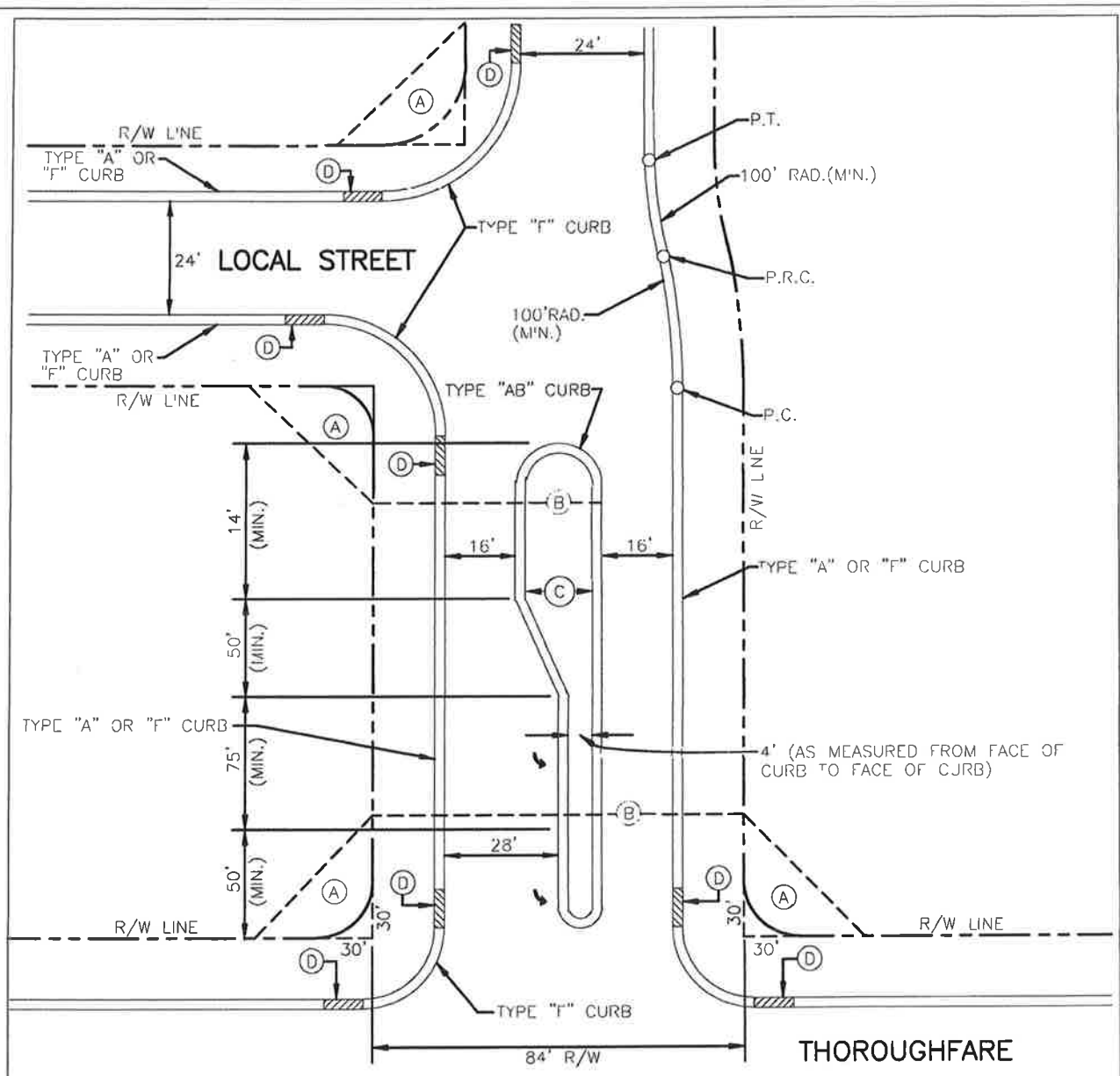

* (A) VISIBILITY TRIANGLE, 30' X 30' AREA PERMITTING NO OBSTRUCTION (1.0 FT. DIA. OR LESS) HIGHER THAN 2' NOR LOWER THAN 8.5', TO ASSURE PROPER VISIBILITY. (SEE L.D.C. 713).

(B) EXTENSION OF VISIBILITY TRIANGLE ACROSS MEDIAN STRIP TO COMPLY WITH STANDARD ABOVE.

(C) MEDIAN STRIP MINIMUM WIDTH 19.33' FROM BACK OF CURB TO BACK OF CURB, LENGTH – 300' MAX NOT EXTENDING BEYOND P.C. OF PAVEMENT INTERSECTION RADIUS OR R/W LINE OF INTERSECTING STREET.

(D) MINIMUM 5' CURB TRANSITION.

SEE SECTION 200 "CURB & GUTTER" SHEET 201.0 FOR CURB TYPE.

SEE SHEET 400.1 "GENERAL NOTES"

RADIUS AS REQUIRED BY ROAD DESIGNATION, LOCAL TO LOCAL 25' R., LOCAL TO THOROUGHFARE 35' R., THOROUGHFARE TO THOROUGHFARE 50' R.

* 30' IS A MINIMUM, MAY BE GREATER, VISIBILITY TRIANGLE TO BE DESIGNED PER F.D.O.T. MANUAL OF UNIFORM MINIMUM STANDARDS FOR DESIGN, CONST. & MAIN. FOR STREETS & HIGHWAYS (GREEN BOOK), LATEST REVISION.

CITY OF HOLMES BEACH PUBLIC WORKS DEPARTMENT			MEDIAN REQUIREMENTS	402.2
REV.BY	DATE			
		DATE OF APPROVAL		

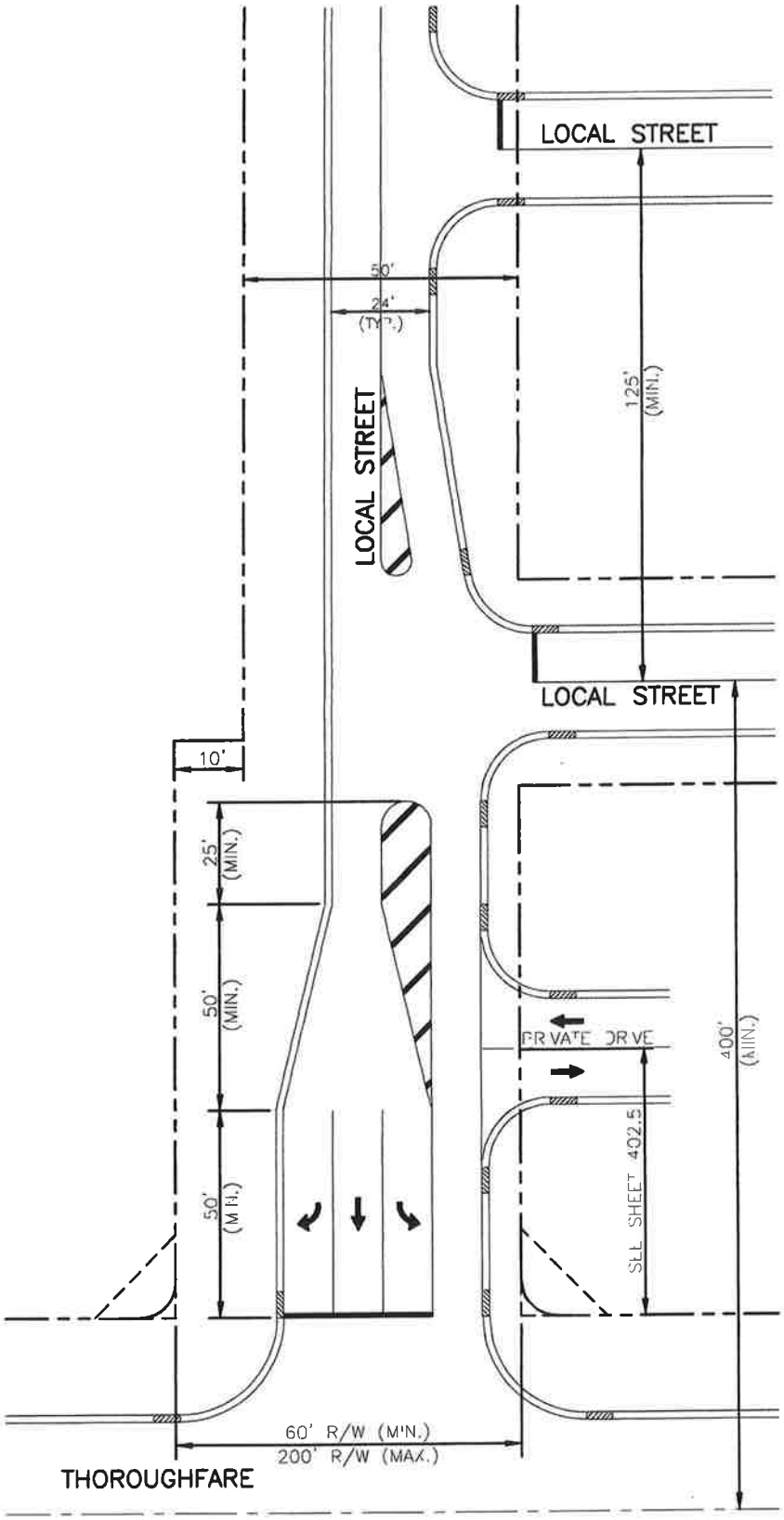

CITY OF HOLMES BEACH PUBLIC WORKS DEPARTMENT			LOCAL STREET TO THOROUGHFARE SEPARATION REQUIREMENTS	402.3
REV.BY	DATE	DATE OF APPROVAL		

DRIVEWAY SETBACK DISTANCE

PRINCIPAL USE OF LOT SERVICED	HIGHEST CLASSIFICATION OF INTERSECTING STREETS	MINIMUM REQUIRED DISTANCE (FEET)
RESIDENTIAL	ARTERIAL – THOROUGHFARE	60'
	MAJOR COLLECTOR – THOROUGHFARE	40'
	MINOR COLLECTOR – THOROUGHFARE	30'
	LOCAL	30'
ALL OTHER USES	ARTERIAL – THOROUGHFARE	75'
	MAJOR COLLECTOR – THOROUGHFARE	60'
	MINOR COLLECTOR – THOROUGHFARE	50'
	LOCAL	50'

CITY OF HOLMES BEACH
PUBLIC WORKS DEPARTMENT

REV. BY	DATE

DATE OF APPROVAL

DRIVEWAY SETBACK DISTANCE

402.5

SOIL CEMENT SPECIFICATIONS

1. DESIGN MIX:

A.) 300 P.S.I. (7 DAYS) LAB DESIGN.

B.) CEMENT CONTENT BY WEIGHT MUST BE A MINIMUM OF 5% AND A MAXIMUM OF 8%.

C.) SOIL, CEMENT AND WATER SHALL BE CENTRAL PLANT MIX ONLY.

2. PROJECT TEST SAMPLES:

A.) THE PILLS CAST FROM PROJECT OPERATIONS MUST BREAK AT 200 P.S.I. OR HIGHER AT 7 DAYS.

B.) CORES MAY BE TAKEN AT 14 DAYS TO PROVIDE ADDITIONAL INFORMATION REGARDING A SOIL CEMENT SECTION.

C.) CORE BREAKS BELOW 150 P.S.I. WILL NOT BE ACCEPTABLE.

D.) IN PLACE DENSITY TESTS SHALL BE MADE IN THE SUB-BASE AND BASE COURSE. FREQUENCY OF TESTING SHALL BE AT LEAST ONE TEST FOR EVERY 500 L.F. OF PAVEMENT. IF PROJECT IS LESS THAN 500 L.F., THEN A MINIMUM OF TWO DENSITY TESTS SHALL BE TAKEN.

E.) ALL CORES SHALL BE 6" DIAMETER.

F.) SUB-BASE TO BE A MINIMUM OF LBR 40 (UNLESS OTHERWISE NOTED).

3. CONSTRUCTION METHODS:

A.) CONSTRUCTION METHODS SHALL IN ACCORDANCE WITH F.D.O.T. STANDARD SPECIFICATIONS FOR ROAD AND BRIDGE CONSTRUCTION, 2000 EDITION, SECTION 270 EXCLUDING SUB-SECTION 270-4.3.1 ("MIX IN PLACE"). ALL OTHER SUB-SECTIONS OF SECTION ARE APPLICABLE.

*NOTE: SOIL CEMENT CAN ONLY BE USED WITH SPECIFIC APPROVAL OF DIRECTOR.

CITY OF HOLMES BEACH PUBLIC WORKS DEPARTMENT			SOIL CEMENT SPECIFICATIONS	403.0
REV.BY	DATE			
		DATE OF APPROVAL		

CEMENT TREATED BASE CONSTRUCTION

GENERAL:

1.1 THE CONSTRUCTION OF THE CEMENT TREATED BASE SHALL IN ACCORDANCE WITH F.D.O.T. STANDARD SPECIFICATIONS FOR ROAD AND BRIDGE CONSTRUCTION, 2000 EDITION, SECTION 270 EXCLUDING SUB-SECTION 270-4.3.1 ("MIX IN PLACE"). ALL OTHER SUB-SECTIONS OF SECTION ARE APPLICABLE.

1.2 THE SUBGRADE IS TO BE CONSTRUCTED TO F.D.O.T. SPECIFICATION SECTION 270-4, 2000 EDITION AND BE COMPACTED TO 98 PERCENT AASHTO T-180 DENSITY. THE SUB-BASE TO BE CONSTRUCTED OF MATERIAL HAVING A MINIMUM LBR OF 40.

1.3 THE CEMENT TREATED BASE IS TO HAVE A MINIMUM LABORATORY CURED FIELD MIX 7-DAY COMPRESSIVE STRENGTH OF 200 PSI, BY BAG SAMPLE.

1.4 SHELL MATERIAL SHALL BE MIXED WITH A MINIMUM CEMENT CONTENT BY WEIGHT OF 2%, BUT NOT TO EXCEED 4%. THE INTENT OF A 2% MIX IS NOT PRIMARILY TO GENERATE STRENGTH BUT TO ENHANCE A SHELL BASE WITH THE RESILENCY AND WATER RESISTANCE CHARACTERISTICS OF SOIL CEMENT, WITHOUT GENERATING THE PROBLEMATIC CRACKING CHARACTERISTICS GENERALLY ASSOCIATED WITH NORMAL SOIL CEMENT MIXES. THEREFORE, THE CONTRACTOR IS INSTRUCTED TO GENERATE A MIX CAPABLE OF ACHIEVING A FIELD TEST 7-DAY COMPRESSIVE STRENGTH IN THE RANGE OF 200 PSI TO 300 PSI, BY BAG SAMPLE.

1.5 BASE MATERIAL SHALL BE F.D.O.T. SHELL AND HAVE A MINIMUM LBR OF 100 AND +/-2% OPTIMUM MOISTURE PRIOR TO MIXING WITH CEMENT.

1.6 ANY AREA REPRESENTED BY A 400 PSI 7-DAY BREAK OR GREATER IS SUBJECT TO REJECTION BY THE OWNER OR OWNER'S REPRESENTATIVE AFTER OBSERVATION, EVALUATION AND TESTING. VALUES FROM 300 PSI TO 400 PSI SHALL BE SUBJECT TO REVIEW AND COMPARISON TO THE DESIGN MIX.

1.7 IT SHOULD BE NOTED THAT MOISTURE CONTENT, RAPIDITY OF COMPACTION EFFORT AND FINAL COMPACTION RESULTS HAVE AS MUCH, IF NOT MORE, INFLUENCE ON THE COMPRESSIVE STRENGTH AS DOES THE CEMENT CONTENT. IN ORDER TO GIVE THE CONTRACTOR A REFERENCED ACCEPTANCE STANDARD, LOWER AND UPPER VALUES OF 200 PSI AND 300 PSI HAVE BEEN ESTABLISHED. THESE VALUES ARE ALSO GIVEN SOME SUBJECTIVE LEEWAY IN THE INSPECTION OF THE FINAL PRODUCT.

1.8 ALL MATERIAL SHALL BE COLLECTED BY THE SACK METHOD, TRANSPORTED TO LAB IN SEALED/MOISTURE RETAINING ENCLOSURE AND TESTED WITHIN 2 HOURS OF FIELD SAMPLING.

TESTING AND INSPECTION:

2.1 ALL TESTING AND INSPECTION SHALL BE PERFORMED BY AN INDEPENDENT LABORATORY APPROVED BY THE ENGINEER/COUNTY.

2.2 THE CONTRACTOR SHALL MAKE AVAILABLE ALL MATERIALS TO THE LABORATORY FOR THE PURPOSE OF PERFORMING ROUTINE TESTS AS SPECIFIED. THIS INCLUDES SAMPLES FOR CEMENT TREATED BASE MIXTURE DESIGN, MAXIMUM DENSITY DETERMINATION, SIEVE ANALYSIS OR OTHER TESTS AS DIRECTED BY THE ENGINEER.

2.3 THE PILLS CAST FROM PROJECT OPERATIONS MUST BREAK AT 200 PSI OR HIGHER AT 7 DAYS.

2.4 TEST SAMPLES MAY BE TAKEN AT 14 DAYS TO PROVIDE ADDITIONAL INFORMATION REGARDING A CEMENT TREATED SECTION. SAMPLES SHALL BE SAWCUT, FULL DEPTH AND BE A MINIMUM OF 12"x12".

2.5 SAMPLE BREAKS BELOW 150 PSI WILL NOT BE ACCEPTABLE. ALL CORES SHALL BE 6 INCHES IN DIAMETER.

2.6 IN PLACE DENSITY TESTS SHALL BE MADE IN THE SUB-BASE AND BASE COURSE. FREQUENCY OF TESTING SHALL BE AT LEAST ONE TEST FOR EVERY 500 L.F. OF PAVEMENT. IF PROJECT IS LESS THAN 500 L.F., THEN A MINIMUM OF TWO DENSITY TESTS SHALL BE TAKEN. A MINIMUM OF TWO STRENGTH TEST VALUE SPECIMENS SHALL BE TAKEN EACH DAY (ONE IN THE MORNING, AND ONE IN THE AFTERNOON)

2.7 TEST RESULTS SHALL BE REPORTED IN WRITING TO THE COUNTY.

2.8 F.D.O.T. SHELL BASE MATERIALS WILL BE ONLY BASE MATERIAL ACCEPTED.

2.9 CRUSHED CONCRETE BASE MATERIAL REQUIRES DIRECTOR'S APPROVAL.

CITY OF HOLMES BEACH PUBLIC WORKS DEPARTMENT			CEMENT TREATED BASE	403.1
REV.BY	DATE			
		DATE OF APPROVAL		

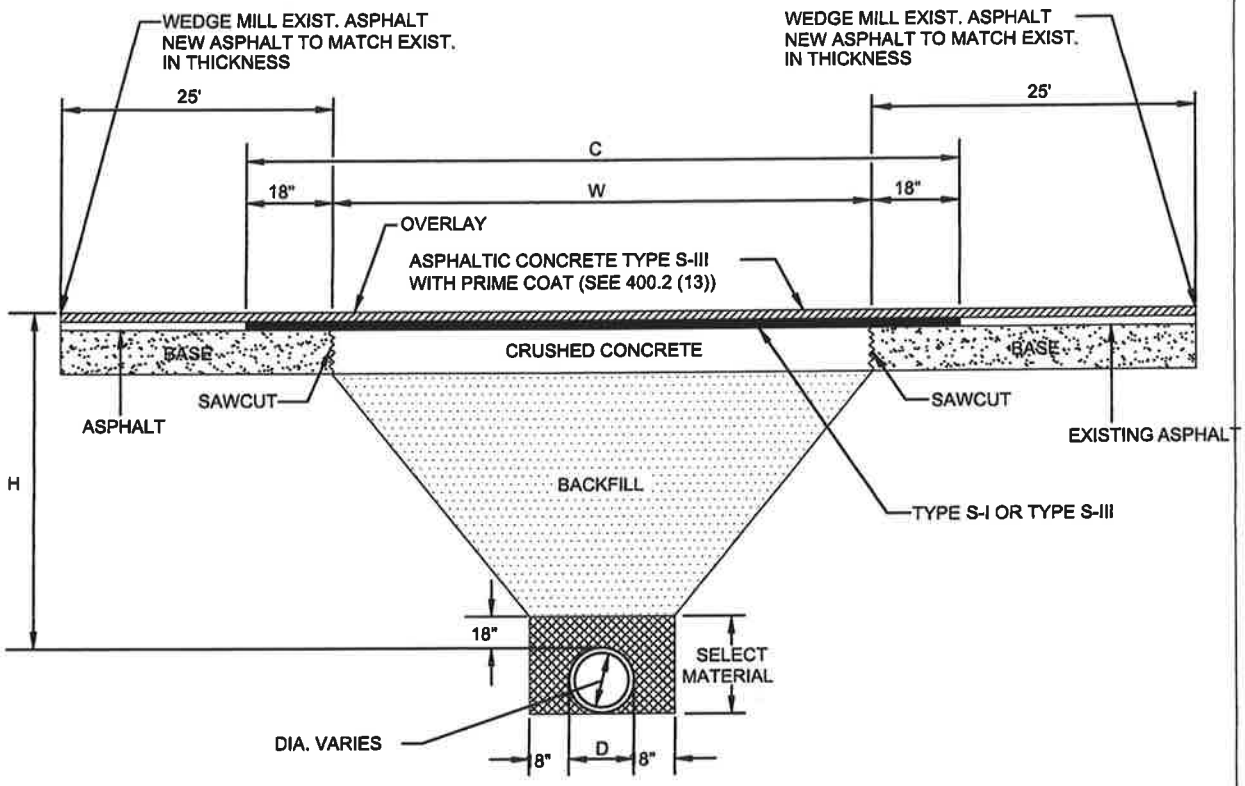

A. CRUSHED CONCRETE BASE SHALL BE A MINIMUM OF 8" THICK AND A MINIMUM OF "W" IN WIDTH, OR GREATER, WHERE DISTURBED AREA IS GREATER THAN "W" FROM EQUATION: W=(2 X H) + D + (2 X 18"). SAND ASPHALT BASE WILL BE AN ACCEPTABLE ALTERNATE.

B. BACKFILL, AASHTO M145-66 SHALL BE PLACED IN LAYERS NOT TO EXCEED 6", EACH LAYER WILL BE THOROUGHLY TAMPED AND/OR ROLLED TO 98% OF MODIFIED PROCTOR MAXIMUM DENSITY (AASHTO T-180). NON-SHRINK, HIGH SLUMP, 1,500 PSI CONC. BACKFILLL MAY BE USED AS AN ALTERNATIVE IF APPROVED BY TRANSPORTATION DEPARTMENT.

C. SELECT MATERIAL, AASHTO M-146-70, SHALL BE PLACED ON BOTH SIDES OF THE PIPE SIMUTANEOUSLY, COMPACT AREA UNDER HAUNCHES OF THE PIPE W/ MECHANICAL TAMPERS, AND THROUGHOUT THE REMAINDER OF THE SELECT MATERIAL.

D. ASPHALTIC CONCRETE FRICTION COURSE, SHALL BE THE SAME DEPTH AND TYPE AS EXISTING OR A MINIMUM OF ONE INCH, WHICHEVER IS GREATER. C = W+36

E. "H" = THE DEPTH FROM TOP OF PIPE TO THE CENTERLINE OF THE ROAD (MINIMUM OF 36") MINIMUM OF 30" UNDER FLOWLINE OF SIDE DITCHES.

F. RESTORE EXISTING SIGNAGE & MARKING WITH THERMOPLASTIC PER F.D.O.T. STANDARDS.

CITY OF HOLMES BEACH PUBLIC WORKS DEPARTMENT			UTILITY ROAD CUT REPLACEMENT	403.2
REV.BY	DATE			
		DATE OF APPROVAL		

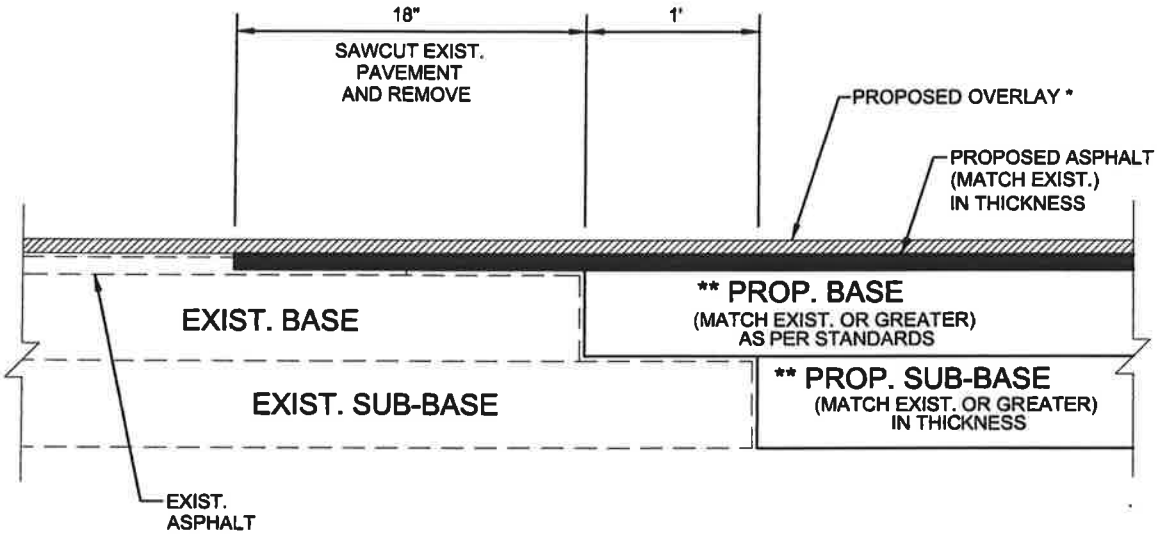

* NOTE: LIMITS OF OVERLAY - EDGE OF PAVEMENT TO EDGE OF PAVEMENT AND 25' BEYOND LIMITS OF CONSTRUCTION.

** NOTE: CONNECTION TO OLDER (SUBSTANDARD THICKNESS) ROADS MAY REQUIRE THICKER PROPOSED BASE AND SUB-BASE TO MEET CURRENT STANDARDS.

SIGNAGE AND MARKING PLAN SHALL ACCOMPANY CONSTRUCTION PLAN.

ROAD CONNECTION DETAIL

N.T.S.

(NEW CONSTRUCTION TO EXISTING FOR WIDENING OR EXTENSION)

CITY OF HOLMES BEACH PUBLIC WORKS DEPARTMENT			ROAD CONNECTION DETAIL	403.3
REV.BY	DATE			
		DATE OF APPROVAL		

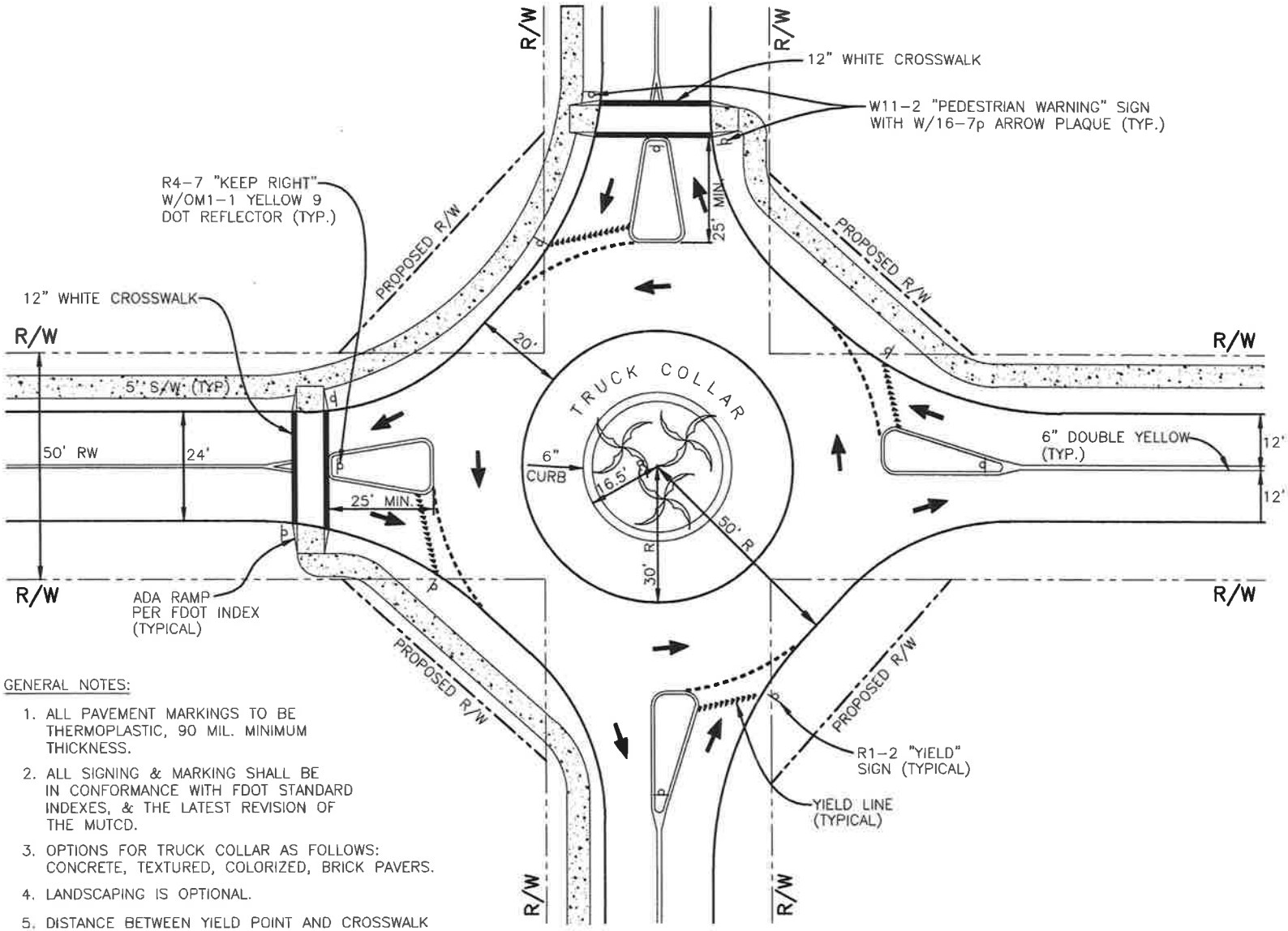

GENERAL NOTES:

1. ALL PAVEMENT MARKINGS TO BE THERMOPLASTIC, 90 MIL. MINIMUM THICKNESS.
2. ALL SIGNING & MARKING SHALL BE IN CONFORMANCE WITH FDOT STANDARD INDEXES, & THE LATEST REVISION OF THE MUTCD.
3. OPTIONS FOR TRUCK COLLAR AS FOLLOWS: CONCRETE, TEXTURED, COLORIZED, BRICK PAVERS.
4. LANDSCAPING IS OPTIONAL.
5. DISTANCE BETWEEN YIELD POINT AND CROSSWALK IS 25' MINIMUM.

CITY OF HOLMES BEACH
PUBLIC WORKS DEPARTMENT

REV.BY	DATE

DATE OF APPROVAL

TYP. ROUNDABOUT FOR LOCAL & RESIDENTIAL STREETS

404.0

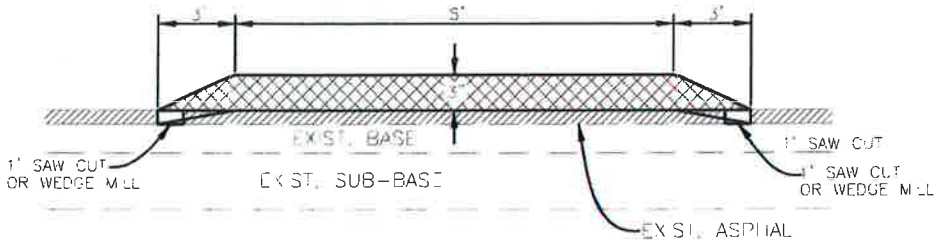

SECTION A–A

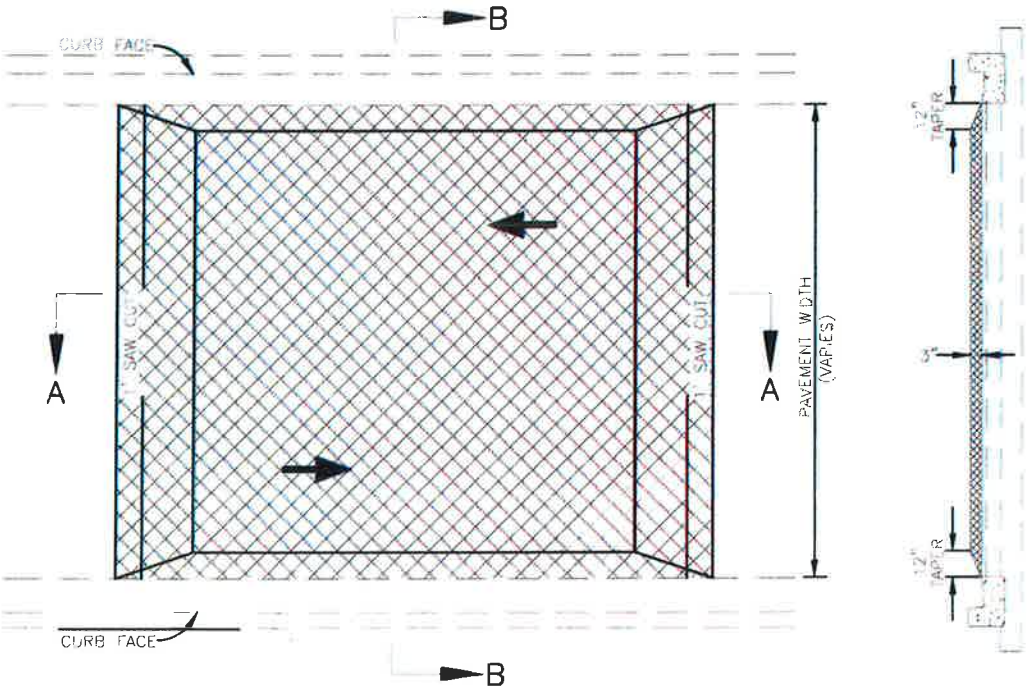

SECTION B–B

PLAN VIEW

NOTE: ALL PAVEMENT MARKINGS PER MUTCD.
DETAILS FOR APPLICATION TO EXISTING ROAD.

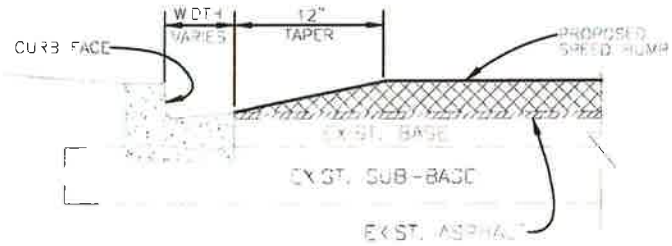

SPEED HUMP TAPER AT CURB

CITY OF HOLMES BEACH PUBLIC WORKS DEPARTMENT			
REV. BY	DATE	**SPEED TABLE DETAIL**	**405.0**
	DATE OF APPROVAL		

INDEX

		SHEET NO.
500	TRAFFIC SIGNAL SUPPLEMENTAL SPECIFICATIONS	500.0
1)	INDEX SHEET	500.1
2)	RESERVED	500.2
3)	RESERVED	501.0
4)	RESERVED	502.0–502.4
5)	RESERVED	503.0
6)	RESERVED	504.0–504.2
7)	RESERVED	505.0
8)	RESERVED	506.0
9)	RESERVED	507.0
10)	RESERVED	508.0
11)	RESERVED	509.0–514.0
12)	RESERVED	515.0
13)	RESERVED	516.0
14)	RESERVED	517.0
15)	RESERVED	518.0–521.0
16)	RESERVED	522.1–522.6
17)	RESERVED	523.0–523.6
18)	RESERVED	551.0
19)	RESERVED	552.0
20)	STREET NAME SIGNING (GROUND MOUNTED) HARDWARE/MATERIALS SPECIFICATIONS	553.0–3
21)	RESERVED	554.0
22)	RESERVED	555.0
23)	RESERVED	556.0
24)	RESERVED	557.0
25)	RESERVED	557.1

FIGURE 553-A

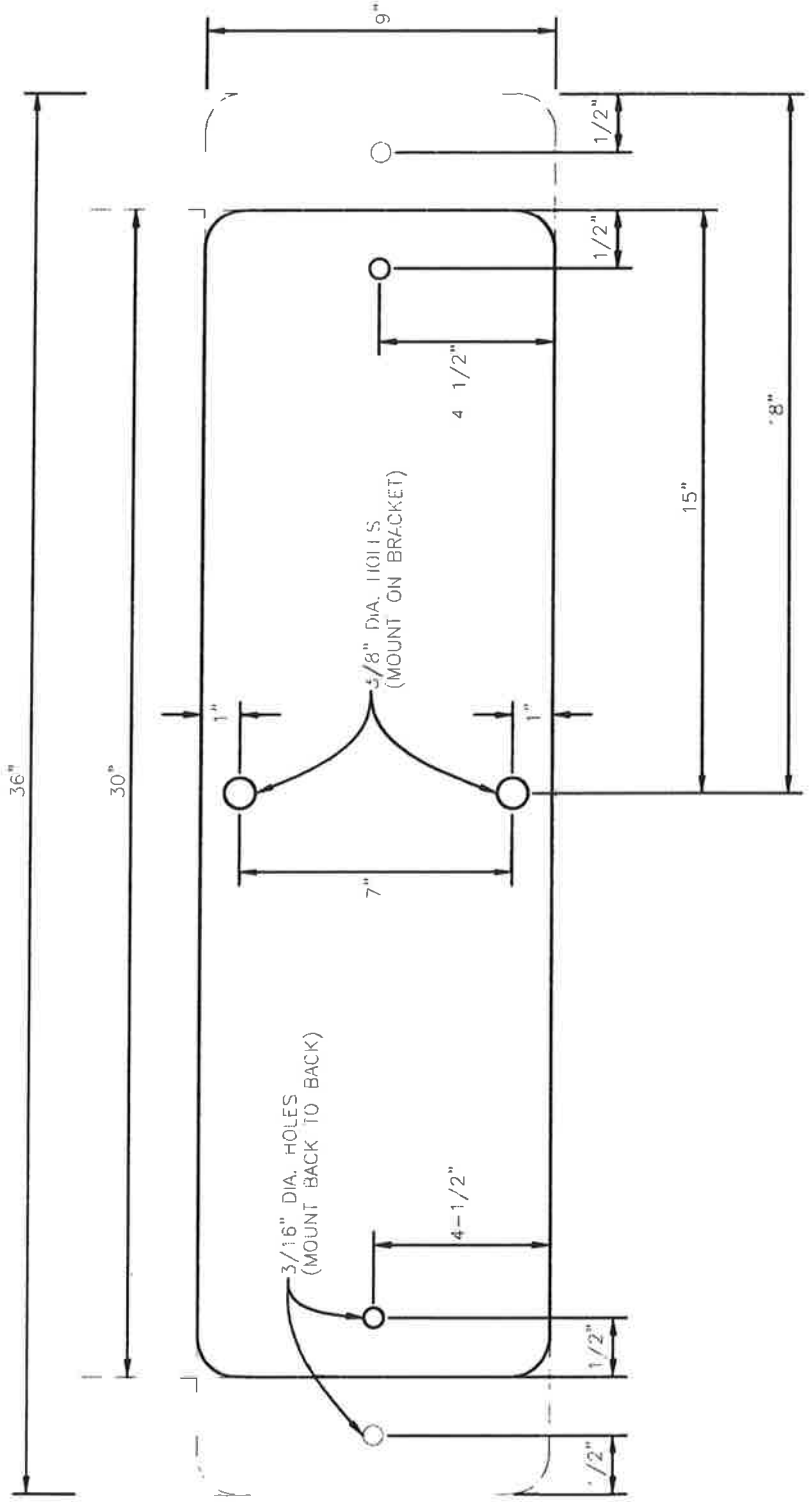

ALUMINUM STREET NAME SIGN BLANK

CITY OF HOLMES BEACH PUBLIC WORKS DEPARTMENT	STREET NAME SIGNS (GROUND MOUNTED) HARDWARE/MATERIAL SPECIFICATIONS	553.2
REV. BY / DATE DATE OF APPROVAL		

FIGURE 553-B

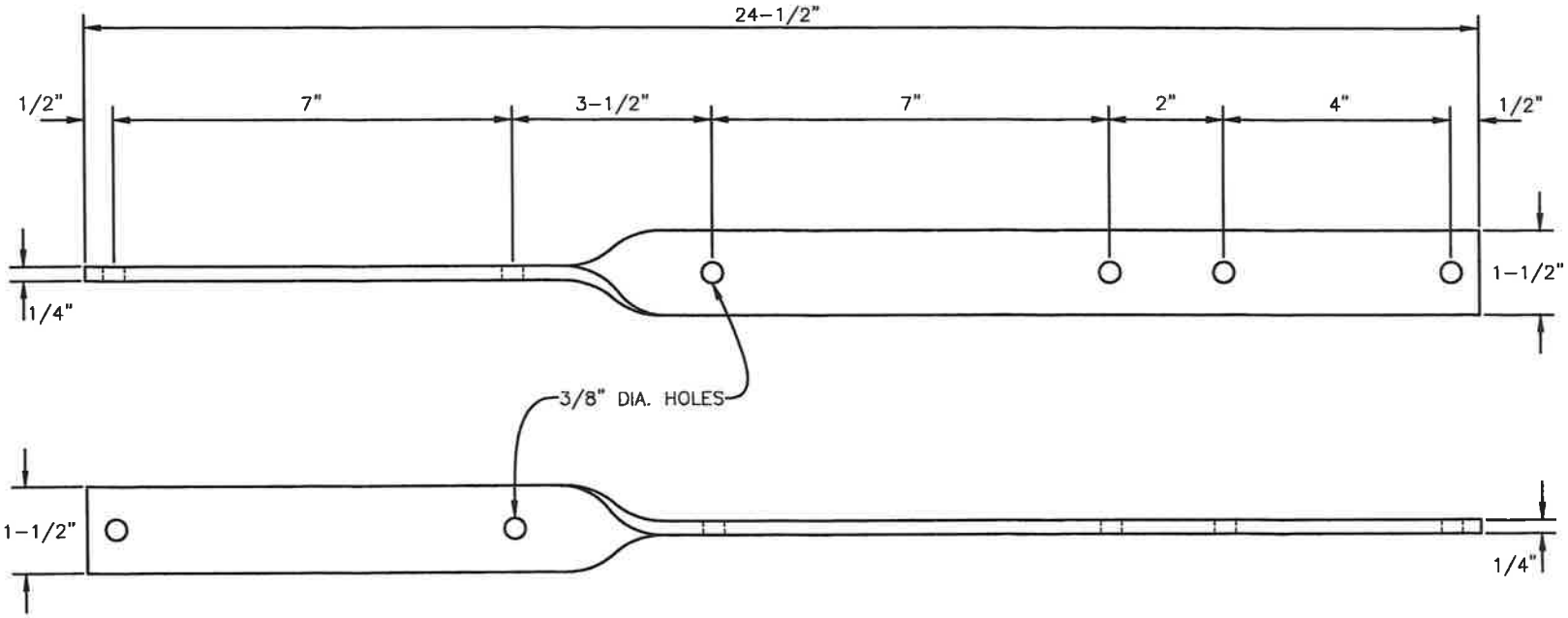

GALVANIZED STEEL STREET NAME SIGN BRACKET

CITY OF HOLMES BEACH
PUBLIC WORKS DEPARTMENT

REV.BY	DATE

DATE OF APPROVAL

STREET NAME SIGNS (GROUND MOUNTED) HARDWARE/MATERIAL SPECIFICATIONS

553.3

LOT DRAINAGE INDEX

	SHEET NO.
700 LOT DRAINAGE SPECIFICATIONS	700.0
1) GENERAL NOTES	700.1
2) LOT DRAINAGE PATTERN EXAMPLE FOR SITE	700.2
3) RESERVED	700.3
4) RESERVED	700.4
5) LOT GRADING RECORD DRAWING/AS-BUILT CERTIFICATION	700.5
6) TYPICAL INFILTRATION TRENCH (NTS)	700.6
7) HEAVY DUTY INFILTRATION TRENCH (NTS)	700.7
8) TYPICAL SWALE DETAIL	700.8

GENERAL NOTES:

1.) FOR CLOSED DRAINAGE, SHOW CURBS, GUTTERS AND SIDEWALKS, IF APPLICABLE.

2.) EXISTING DRAINAGE SHALL BE MAINTAINED OR IMPROVED.

3.) MINIMUM DRIVEWAY RISE FROM CURB TO GARAGE IS 1%.

4.) SHOW ALL EASEMENTS.

5.) MINIMUM GRADE SLOPES ARE AS FOLLOWS: FRONT YARD - 2.0%; REAR AND SIDE YARDS - 1.5%; SWALES - 1.0%.

6.) MINOR MODIFICATIONS TO ACCOMMODATE SPECIAL CONDITIONS SUCH AS TREES MAY BE APPROVED BY THE ACCESS/DRAINAGE INSPECTOR.

7.) LOTS WITH SPECIAL CONDITIONS MAY HAVE SLOPES BASED ON AN ENGINEER'S DETAILED DESIGN APPROVED BY THE TRANSPORTATION DIRECTOR OR A DESIGNEE.

8.) DEVIATIONS DUE TO EXISTING TREES, VEGETATION OR OTHER EXTENUATING CIRCUMSTANCES MAY BE APPROVED. DIFFICULTIES ARISING FROM SUCH DEVIATIONS ARE THE RESPONSIBILITY OF THE PROPERTY OWNER TO SATISFACTORILY RESOLVE.

9.) LOT SLOPES APPLY TO A 75' RADIUS FROM THE EDGE OF HOUSE. THE INTENT IS TO ALLOW FLEXABILITY ON LARGER LOTS.

10.) ALL CONFLICTS SHALL BE REMEDIED TO THE SATISFACTION OF THE PUBLIC WORKS DEPARTMENT.

11.) PERMITTEE SHALL SUBMIT A COPY OF THE APPROVED SUBDIVISION DRAINAGE PLAN. SIZE REQUIREMENTS ARE 8-1/2"x11", 8-1/2"x14" OR 11"x17" AT A SCALE OF 1"=100' OR 1"=200' FOR LOTS OF 5 ACRES OR MORE.

CITY OF HOLMES BEACH PUBLIC WORKS DEPARTMENT			LOT DRAINAGE GENERAL NOTES	700.1
REV.BY	DATE			
		DATE OF APPROVAL		

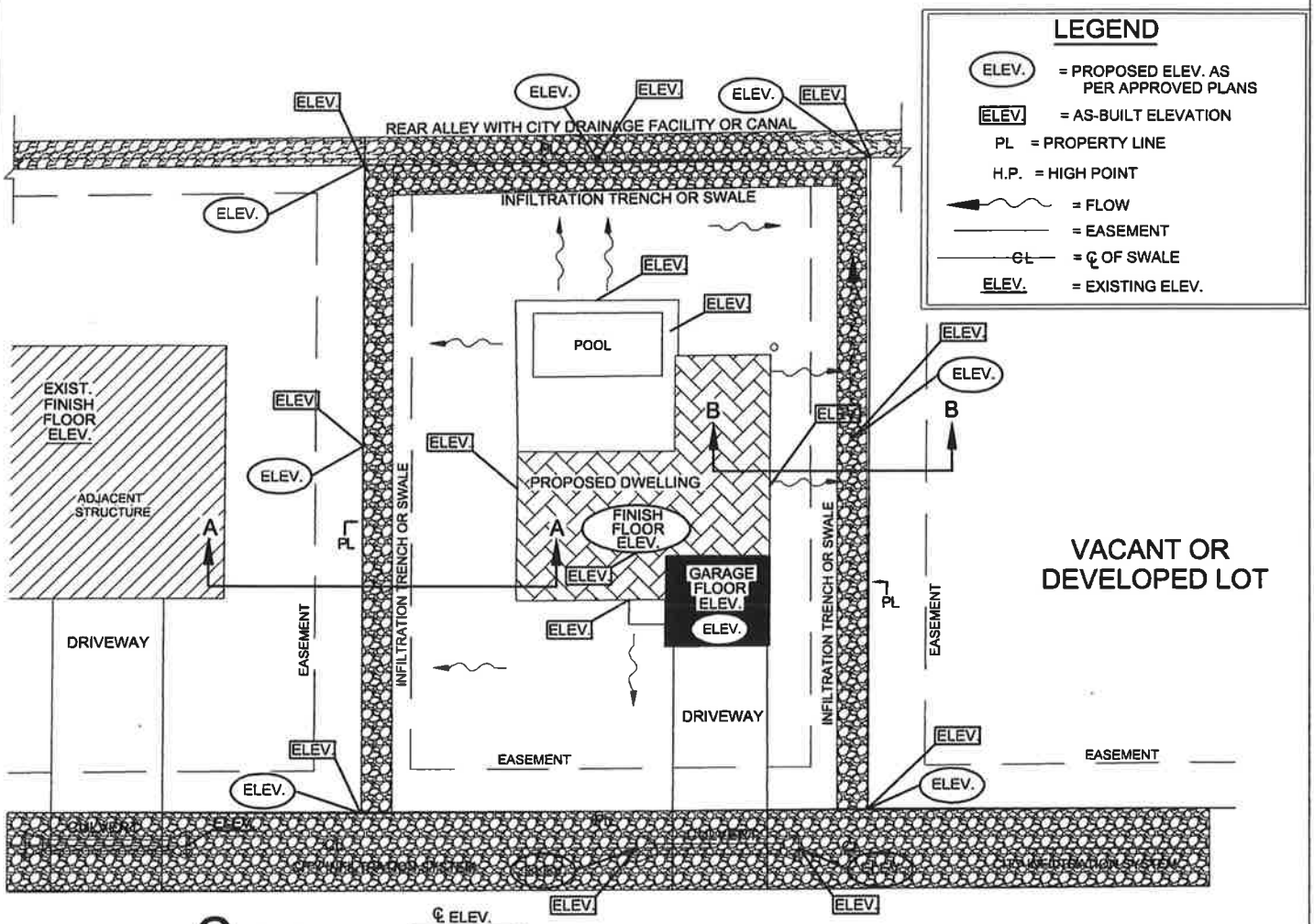

NOTE: NO IMPERVIOUS SURFACES SHALL BE ALLOWED WITHIN THE CITY'S RIGHT OF WAY. DRIVEWAYS SHALL BE CONSTRUCTED WITH PERMEABLE MATERIALS APPROVED BY THE CITY.

NOTE: THE INTENT IS TO CONVEY RUNOFF TO THE PUBLIC R/W BY USING ONE, OR ANY COMBINATION OF, BUT NOT LIMITED TO: SWALES, GUTTERS, YARD DRAINS, INFILTRATION TRENCHES OR SLOTTED PIPE.

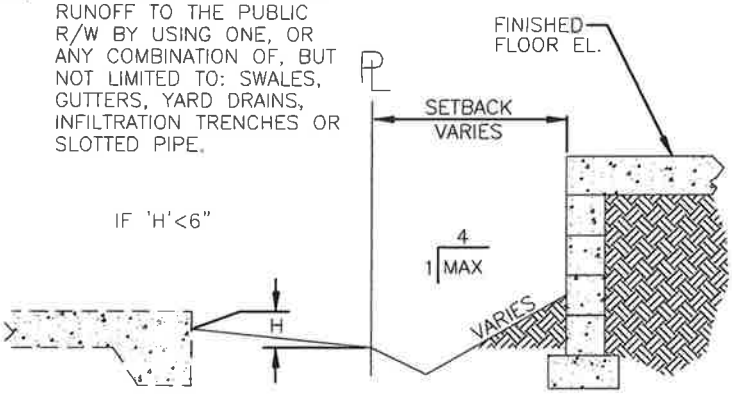

SWALE OPTION

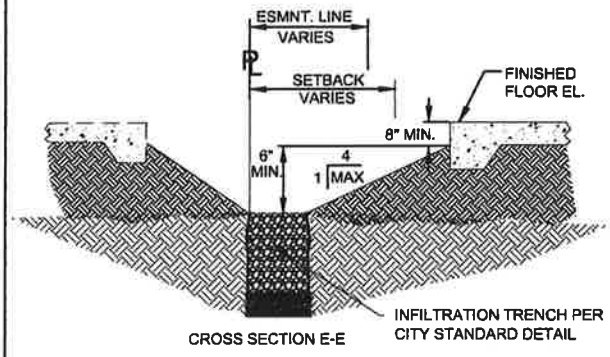

INFILTRATION TRENCH OPTION

CITY OF HOLMES BEACH PUBLIC WORKS DEPARTMENT			LOT DRAINAGE PATTERN EXAMPLE FOR SITE	700.2
REV.BY	DATE			
		DATE OF APPROVAL		

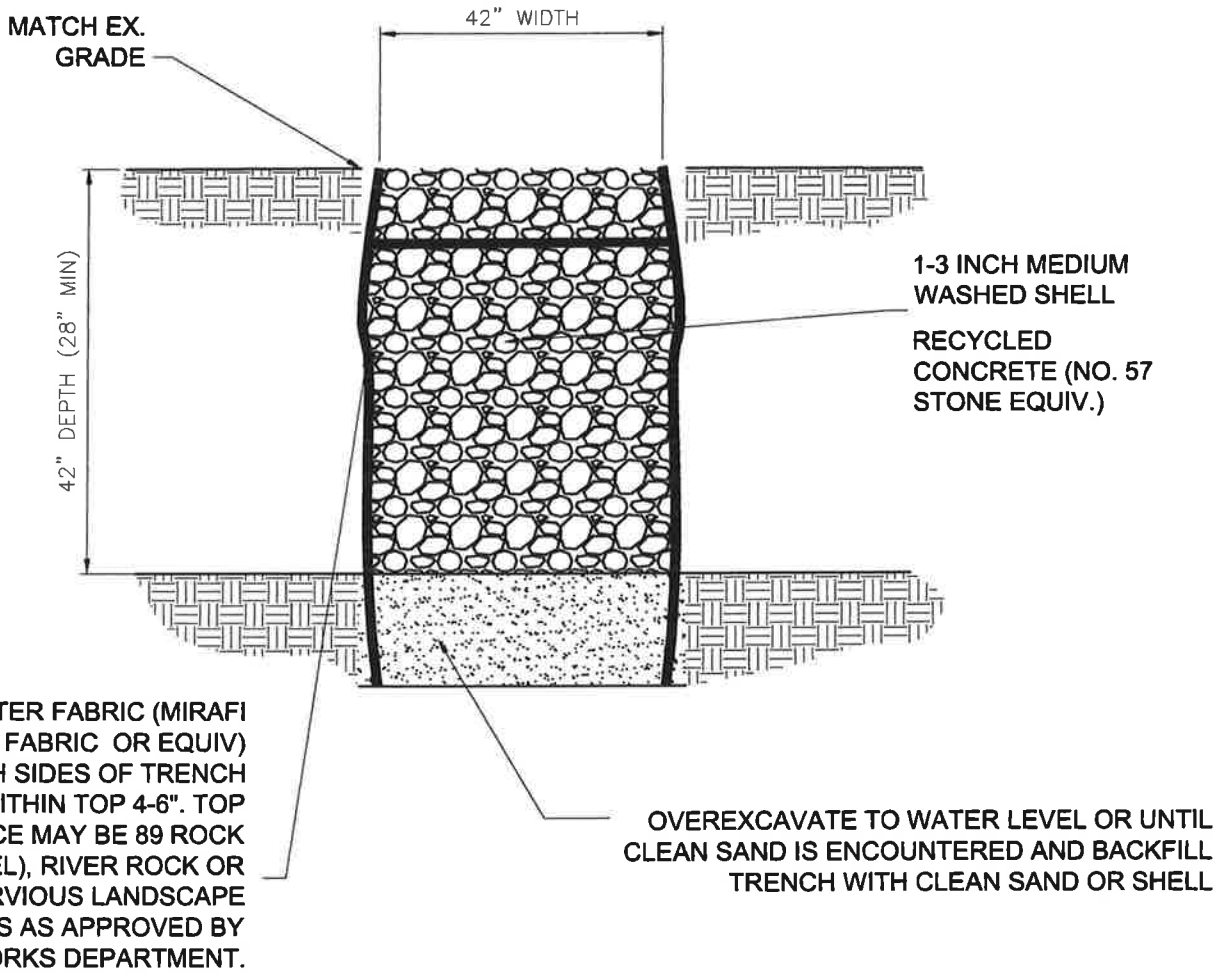

TYPICAL INFILTRATION TRENCH

NTS

CITY OF HOLMES BEACH PUBLIC WORKS DEPARTMENT			TYPICAL INFILTRATION TRENCH	700.6
REV.BY	DATE			
		DATE OF APPROVAL		

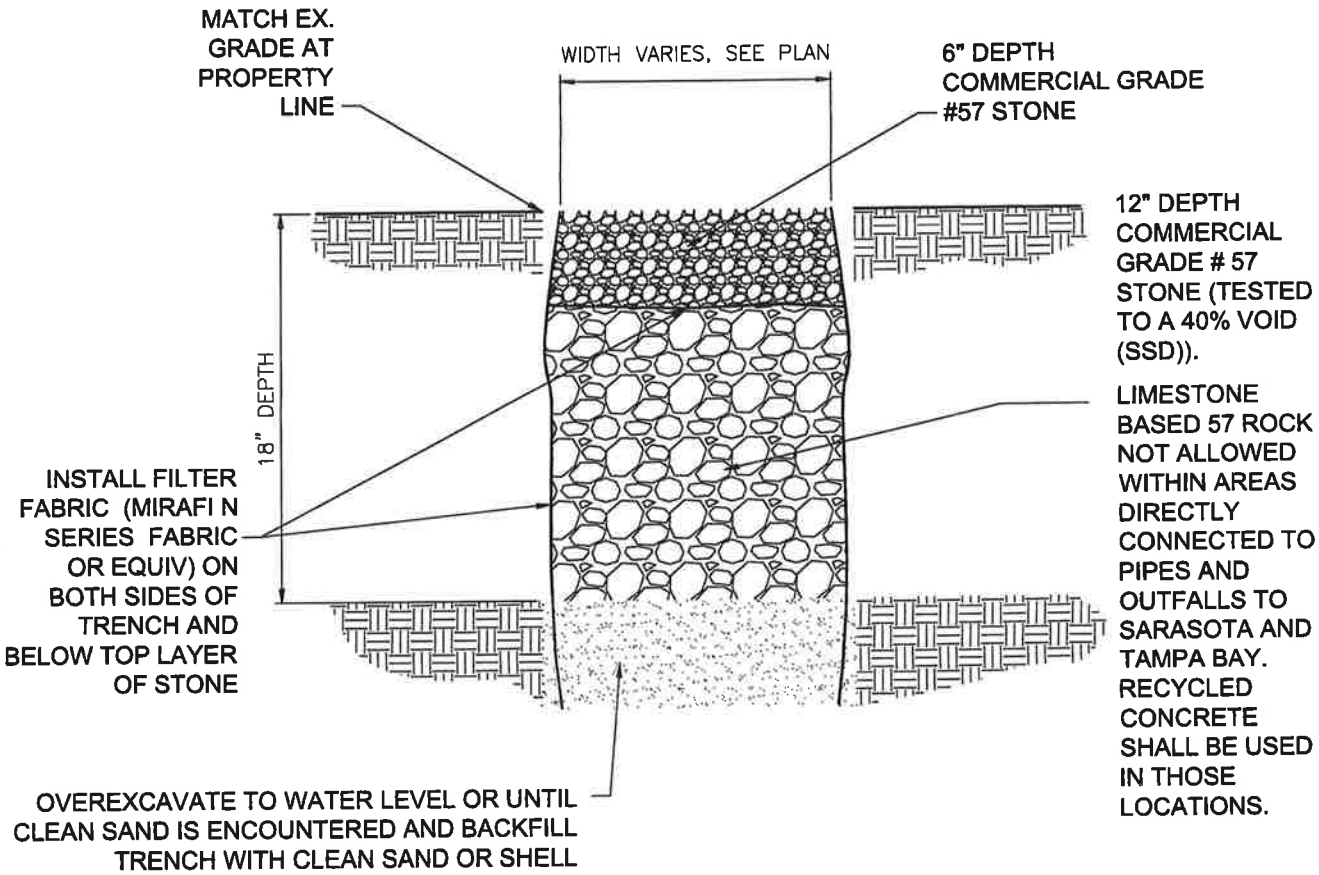

HEAVY DUTY INFILTRATION TRENCH

NTS

CITY OF HOLMES BEACH PUBLIC WORKS DEPARTMENT			HEAVY DUTY INFILTRATION TRENCH	700.7
REV.BY	DATE			
		DATE OF APPROVAL		

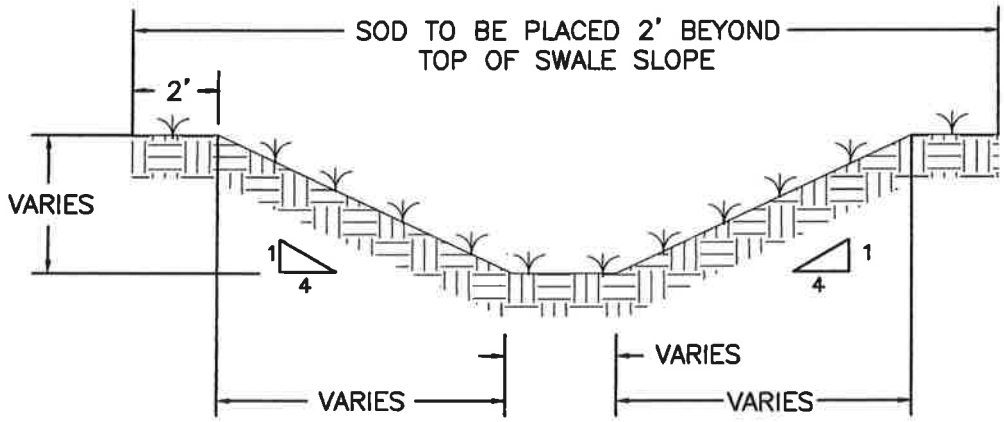

TYPICAL SWALE SECTION

N.T.S.

CITY OF HOLMES BEACH PUBLIC WORKS DEPARTMENT			TYPICAL SWALE DETAIL	700.8
REV.BY	DATE			
		DATE OF APPROVAL		